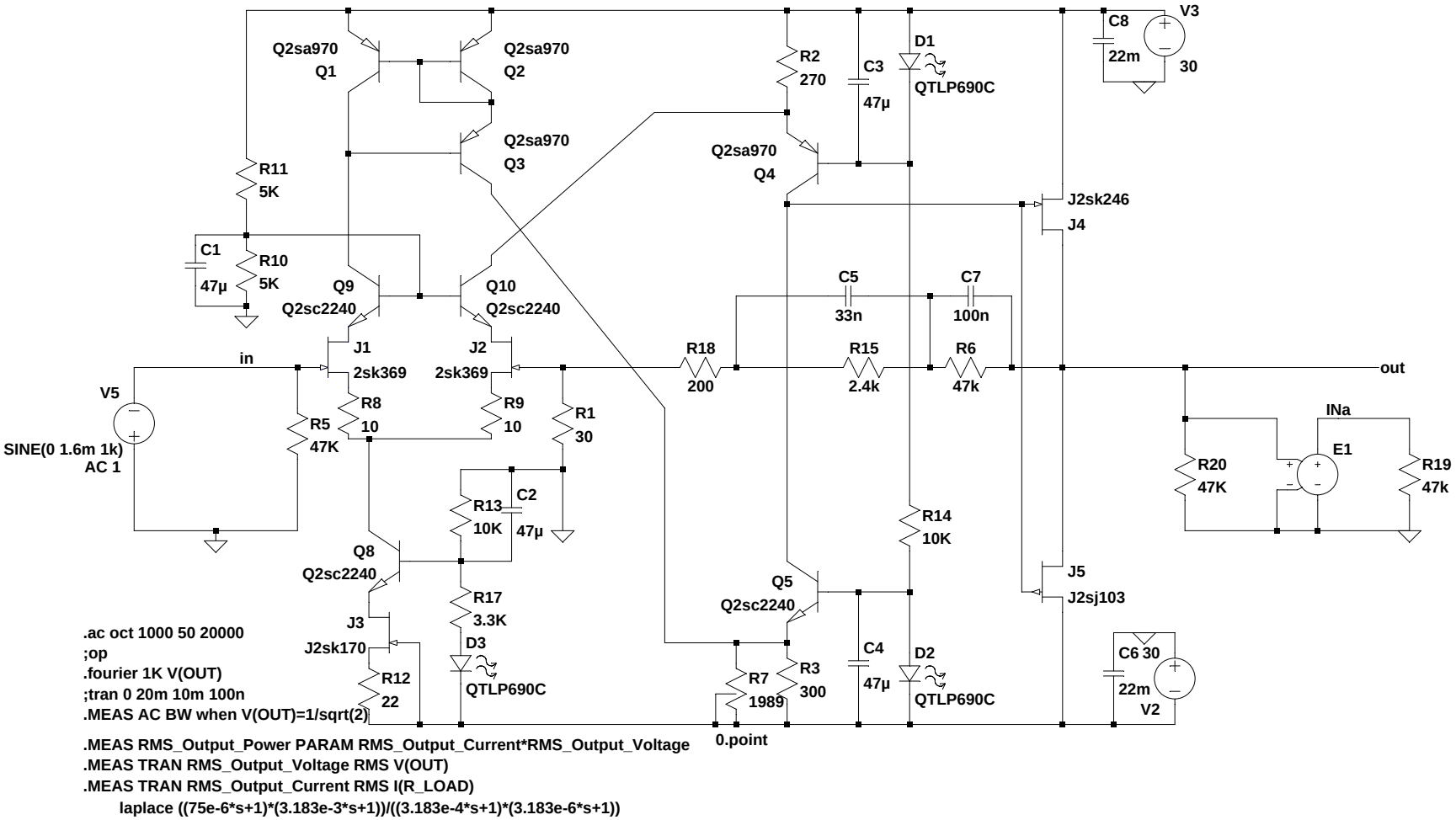


```
.ac oct 1000 50 20000
;op
.fourier 1K V(OUT)
;tran 0 20m 10m 100n
.MEAS AC BW when V(OUT)=1/sqrt(2)
.MEAS RMS_Output_Power PARAM RMS_Output_Current*RMS_Output_Voltage
.MEAS TRAN RMS_Output_Voltage RMS V(OUT)
.MEAS TRAN RMS_Output_Current RMS I(R_LOAD)
      laplace ((75e-6*s+1)*(3.183e-3*s+1))/((3.183e-4*s+1)*(3.183e-6*s+1))
```

--- C:\Programmer\LTC\SwCADIII\lineup RII.asc ---