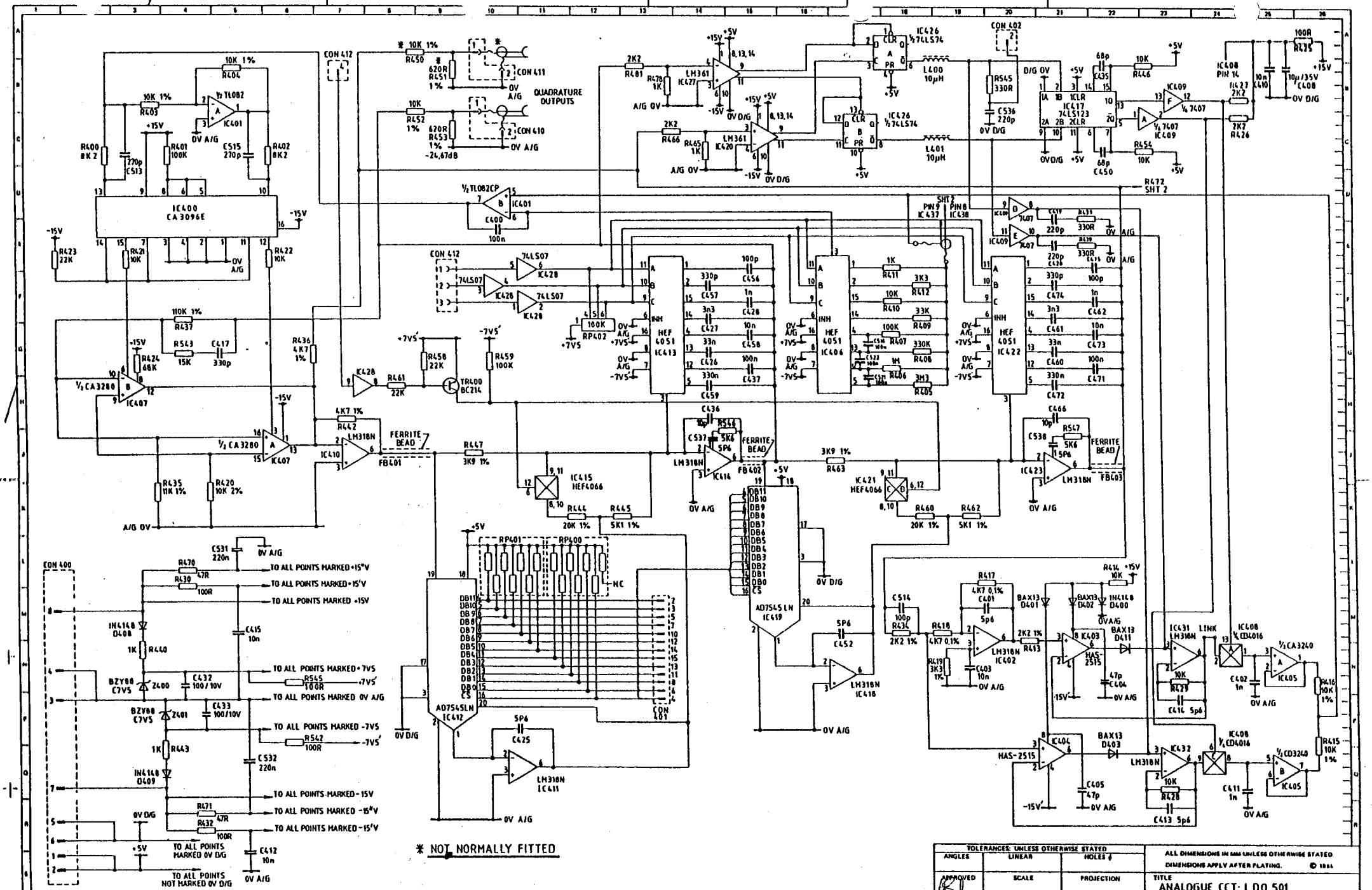

ISSUE	1	2	3	4	5
DATE	22:5:84	26.6.84	5.7.84	28.8.84	3-5-85
CHANGE NOTE				119/120	
CERTIFIED					

TOLERANCES: UNLESS OTHERWISE STATED

ANGLES	LINEAR	HOLES ø
APPROVED	SCALE	PROJECTION
CHECKED	FINISH	
DRAWN AIM	MATERIAL	

ALL DIMENSIONS IN MM UNLESS OTHERWISE STATED. DIMENSIONS APPLY AFTER PLATING. © 1984

TITLE ANALOGUE CCT- LDO 501

DRAWING No. A410-088 SHEET 1 OF 3

AIM