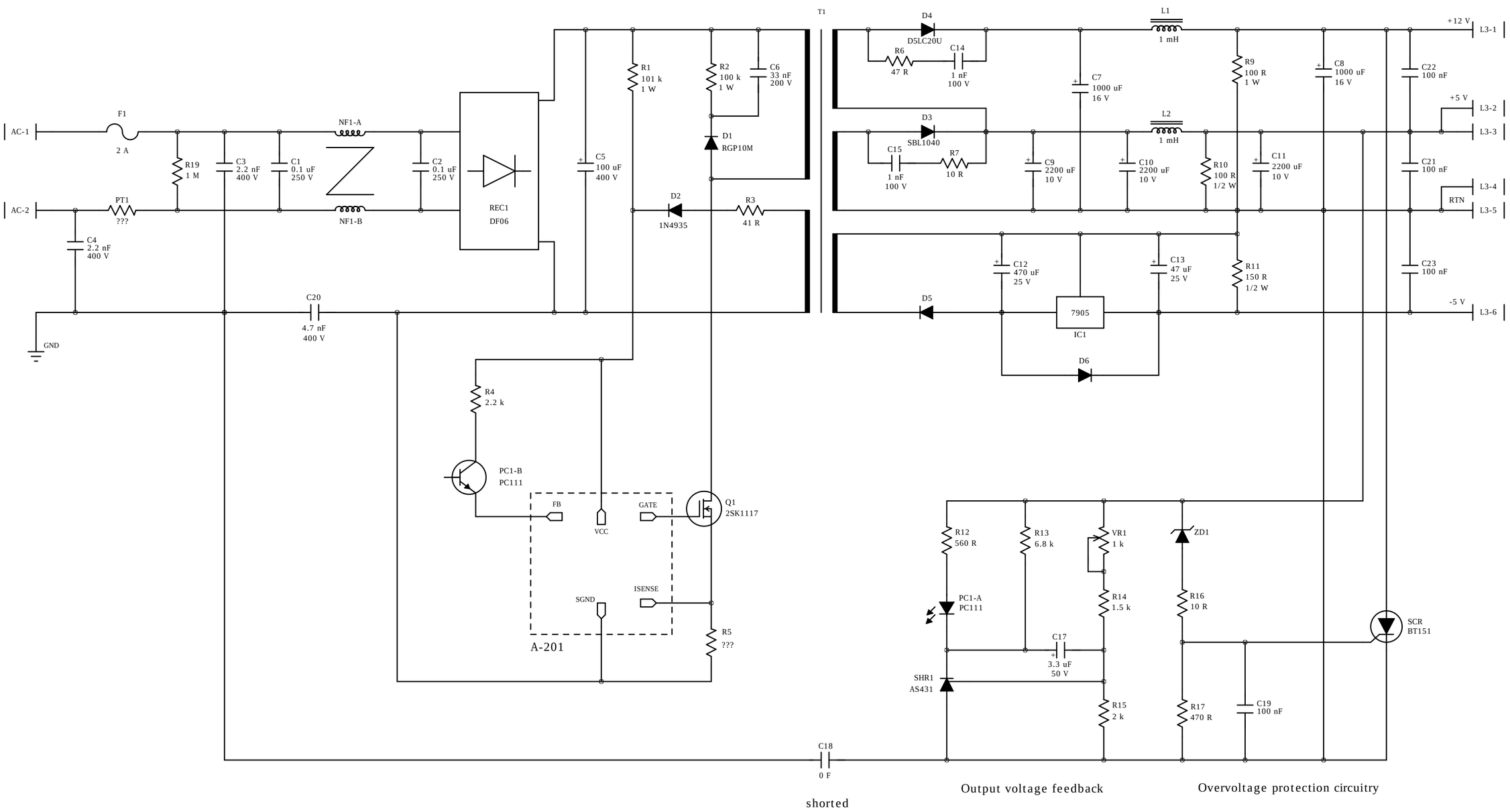

COMPANY:				
TITLE: PSA-4033ATI				
DRAWN:	DATED:	CODE:	SIZE: C	DRAWING NO: / REV:
CHECKED:	DATED:			
QUALITY CONTROL:	DATED:			
RELEASED:	DATED:	SCALE:		SHEET: 1 OF 2

REVISION RECORD			
LTR	ECO NO:	APPROVED:	DATE:

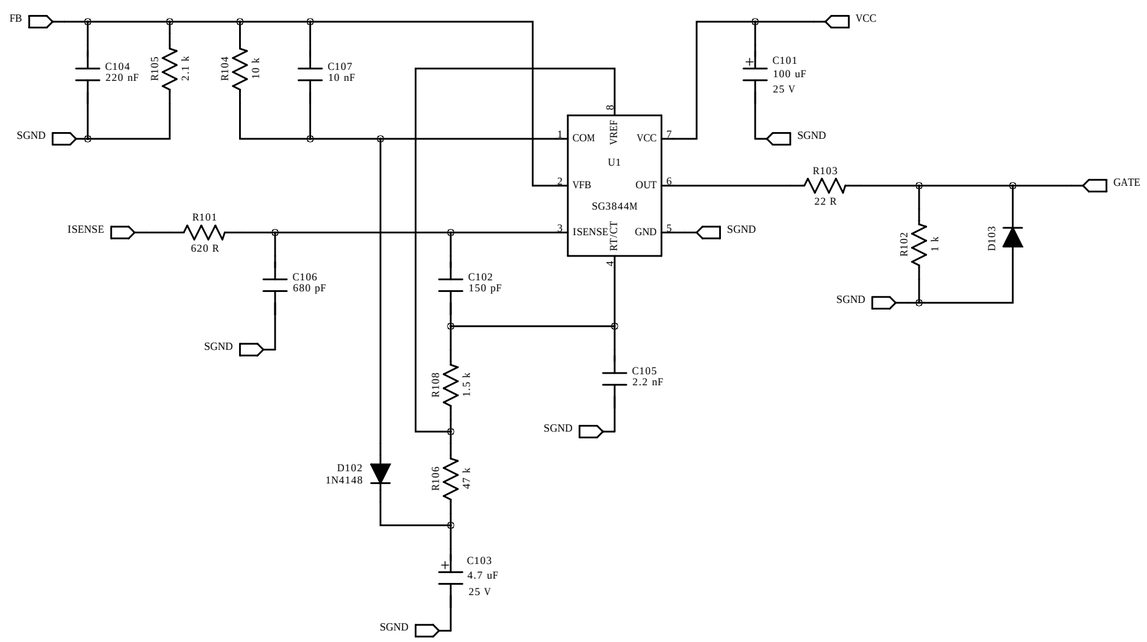

COMPANY:			
TITLE: PSA-4033ATI			
CODE:	SIZE: C	DRAWING NO:	REV:
SCALE:		SHEET: 2 OF 2	

DRAWN:	DATED:
CHECKED:	DATED:
QUALITY CONTROL:	DATED:
RELEASED:	DATED: