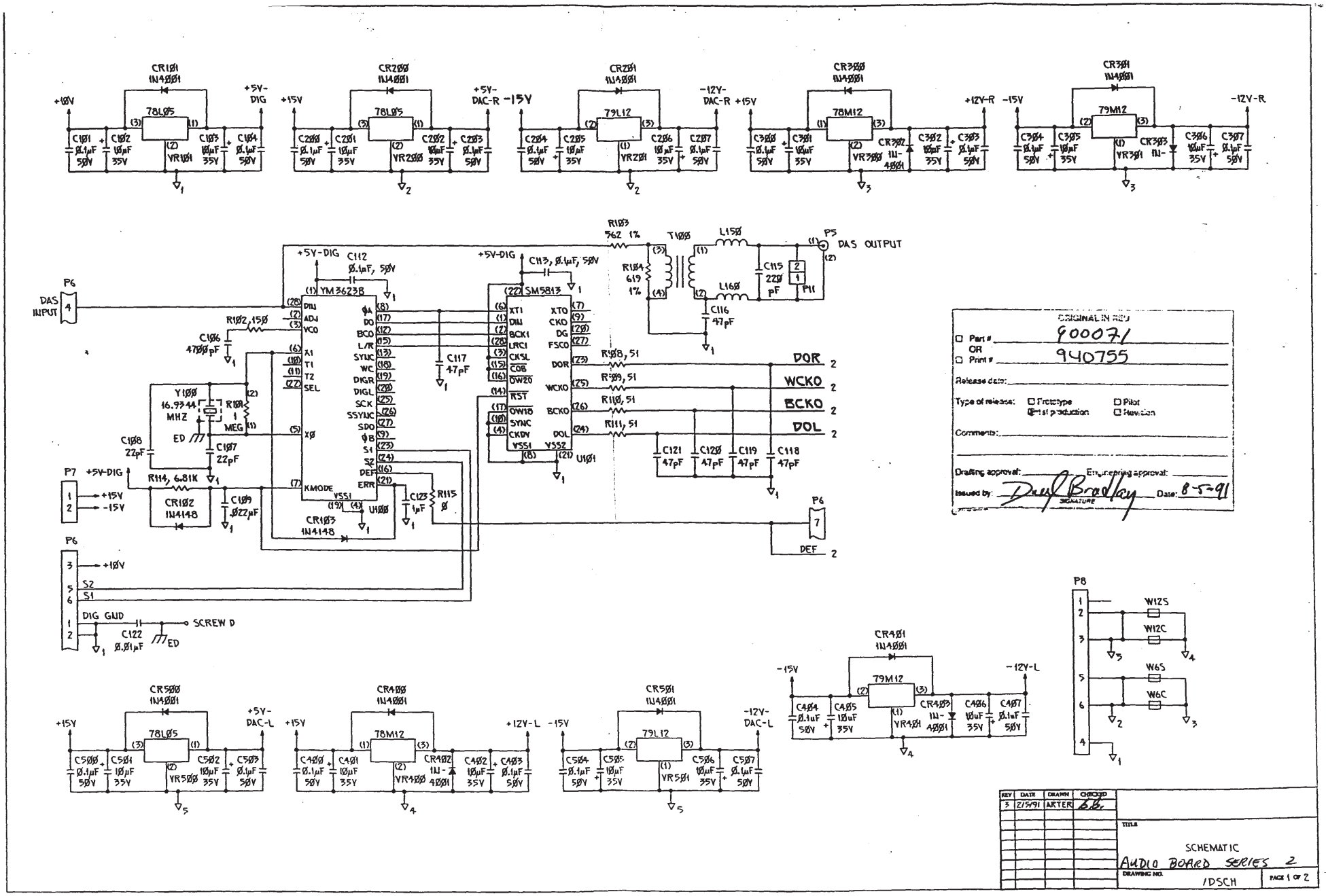

CR101 1N4001
78L05
+10V
+5V-DIG
VR101
C101 0.1µF 50V
C102 10µF 35V
C103 10µF 35V
C104 0.1µF 50V
CR200 1N4001
78L05
+15V
+5V-DAC-R
VR200
C200 0.1µF 50V
C201 10µF 35V
C202 10µF 35V
C203 0.1µF 50V
CR201 1N4001
79L12
-15V
-12V-DAC-R
VR201
C204 0.1µF 50V
C205 10µF 35V
C206 10µF 35V
C207 0.1µF 50V
CR300 1N4001
78M12
+15V
+12V-R
VR300
C300 0.1µF 50V
C301 10µF 35V
CR302 1N-4001
C302 10µF 35V
C303 0.1µF 50V
CR301 1N4001
79M12
-15V
-12V-R
VR301
C304 0.1µF 50V
C305 10µF 35V
CR303 1N-
C306 10µF 35V
C307 0.1µF 50V
P6
DAS INPUT
+5V-DIG
C112 0.1µF, 50V
YM3623B
DIN
ADJ
VCO
X1
T1
T2
SEL
X0
KMODE
VSS1
U100
C113, 0.1µF, 50V
SM5813
XTI
DIN
BCK1
LRC1
CKSL
COB
OW20
RST
OW18
SYNC
CKDV
VSS1
XTO
CKO
DG
FSCO
DOR
WCKO
BCKO
DOL
VSS2
U101
R103 562 1%
T100
L150
R104 619 1%
L160
C115 220 pF
C116 47pF
P5
DAS OUTPUT
P11
R102, 150
C106 4700pF
C117 47pF
Y100 16.9344 MHZ
R101 1 MEG
ED
C108 22pF
C107 22pF
R108, 51
R109, 51
R110, 51
R111, 51
DOR
WCKO
BCKO
DOL
C121 47pF
C120 47pF
C119 47pF
C118 47pF
P7
+5V-DIG
R114, 6.81K
CR102 1N4148
C109 .022µF
CR103 1N4148
C123 1µF
R115 0
P6
DEF
+10V
S2
S1
DIG GND
C122 0.01µF
SCREW D
ED
CR500 1N4001
78L05
+15V
+5V-DAC-L
VR500
C500 0.1µF 50V
C501 10µF 35V
C502 10µF 35V
C503 0.1µF 50V
CR400 1N4001
78M12
+15V
+12V-L
VR400
C400 0.1µF 50V
C401 10µF 35V
CR402 1N-4001
C402 10µF 35V
C403 0.1µF 50V
CR501 1N4001
79L12
-15V
-12V-DAC-L
VR501
C504 0.1µF 50V
C505 10µF 35V
C506 10µF 35V
C507 0.1µF 50V
CR401 1N4001
79M12
-15V
-12V-L
VR401
C404 0.1µF 50V
C405 10uF 35V
CR403 1N-4001
C406 10uF 35V
C407 0.1uF 50V
P8
W12S
W12C
W6S
W6C
ORIGINAL IN REV
Part # 900071
OR
Print # 940755
Release date:
Type of release: Prototype Pilot
1st production Revision
Comments:
Drafting approval:
Engineering approval:
Issued by: Daryl Bradley
SIGNATURE
Date: 8-5-91
REV DATE DRAWN CHECKED
3 2/5/91 ARTER
TITLE
SCHEMATIC
AUDIO BOARD SERIES 2
DRAWING NO. 1DSCH
PAGE 1 OF 2