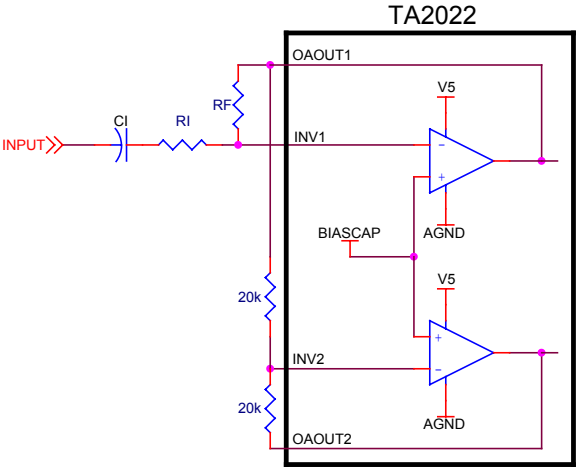

Figure 4: Input Stage Setup for Bridging