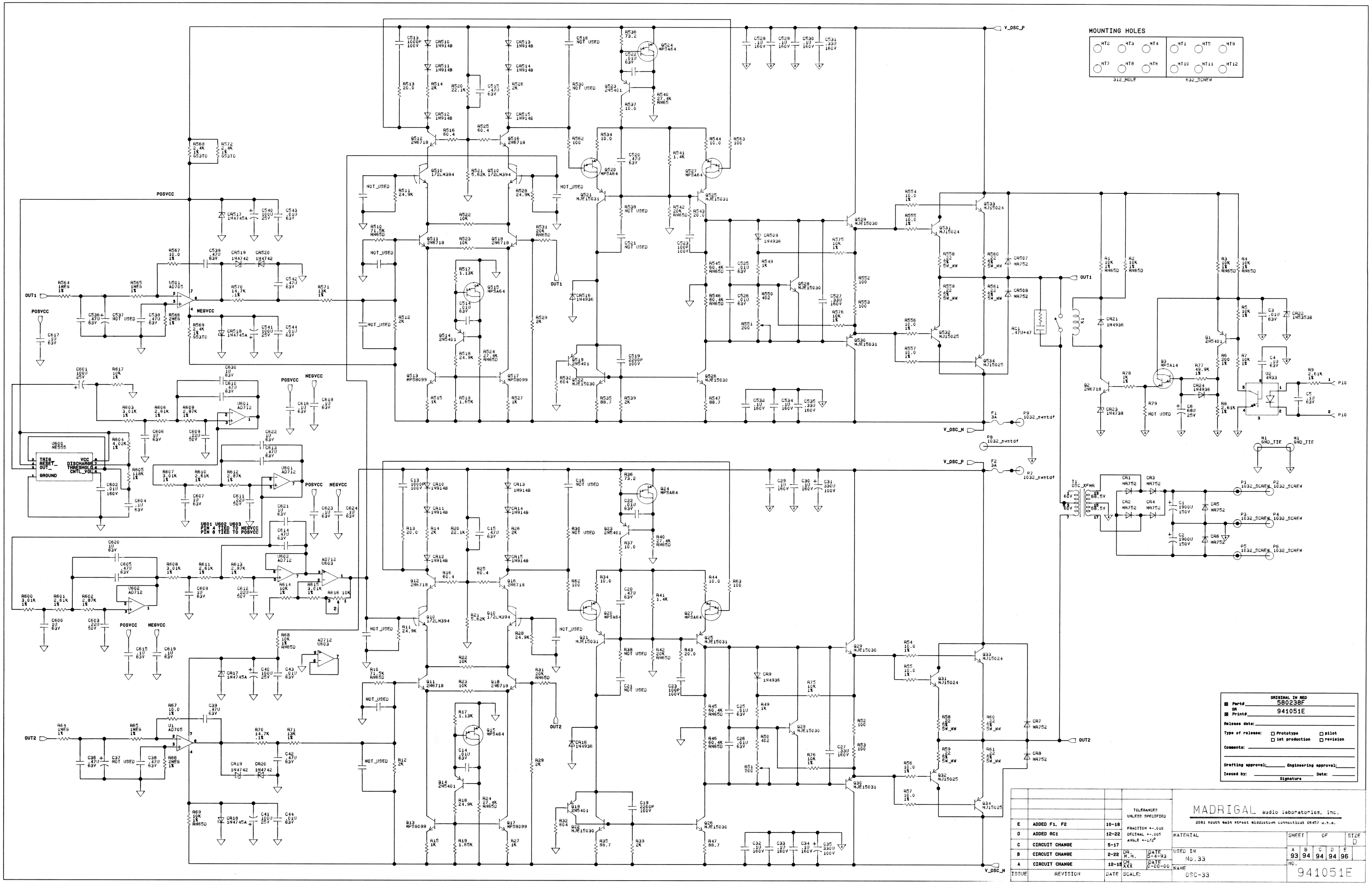
MOUNTING HOLES
312_HOLE
632_SCREW
V_OSC_P
V_OSC_N
OUT1
OUT2
POSVCC
NEGVCC
NOT_USED
U601 U602 U603
PIN 4 TIED TO NEGVCC
PIN 8 TIED TO POSVCC
U600
NE555
TRIG
RESET
OUT
GROUND
VCC
DISCHARGE
THRESHOLD
CNTL_VOLT
OSC_XFMR
P8
1032_swstdf
P9
1032_swstdf
P7
1032_swstdf
P1
1032_SCREW
P2
1032_SCREW
P3
1032_SCREW
P4
1032_SCREW
P5
1032_SCREW
P6
1032_SCREW
P10
M1
GND_TIE
ORIGINAL IN RED
Part#
580238F
OR
Print#
941051E
Release date:
Type of release:
Prototype
pilot
1st production
revision
Comments:
Drafting approval:
Engineering approval:
Issued by:
Date:
Signature
TOLERANCES UNLESS SPECIFIED
FRACTION +-.010
DECIMAL +-.005
ANGLE +-1/2°
E ADDED F1, F2 10-18
D ADDED RC1 12-22
C CIRCUIT CHANGE 5-17
B CIRCUIT CHANGE 2-22 DR. M.M. DATE 5-4-93
A CIRCUIT CHANGE 12-15 CH. XXX DATE 0-00-00
ISSUE REVISION DATE SCALE:
MADRIGAL audio laboratories, inc.
2081 south main street middletown connecticut 06457 u.s.a.
MATERIAL
USED IN
No.33
NAME
OSC-33
SHEET OF
SIZE D
A 93 B 94 C 94 D 94 E 96
NO.
941051E