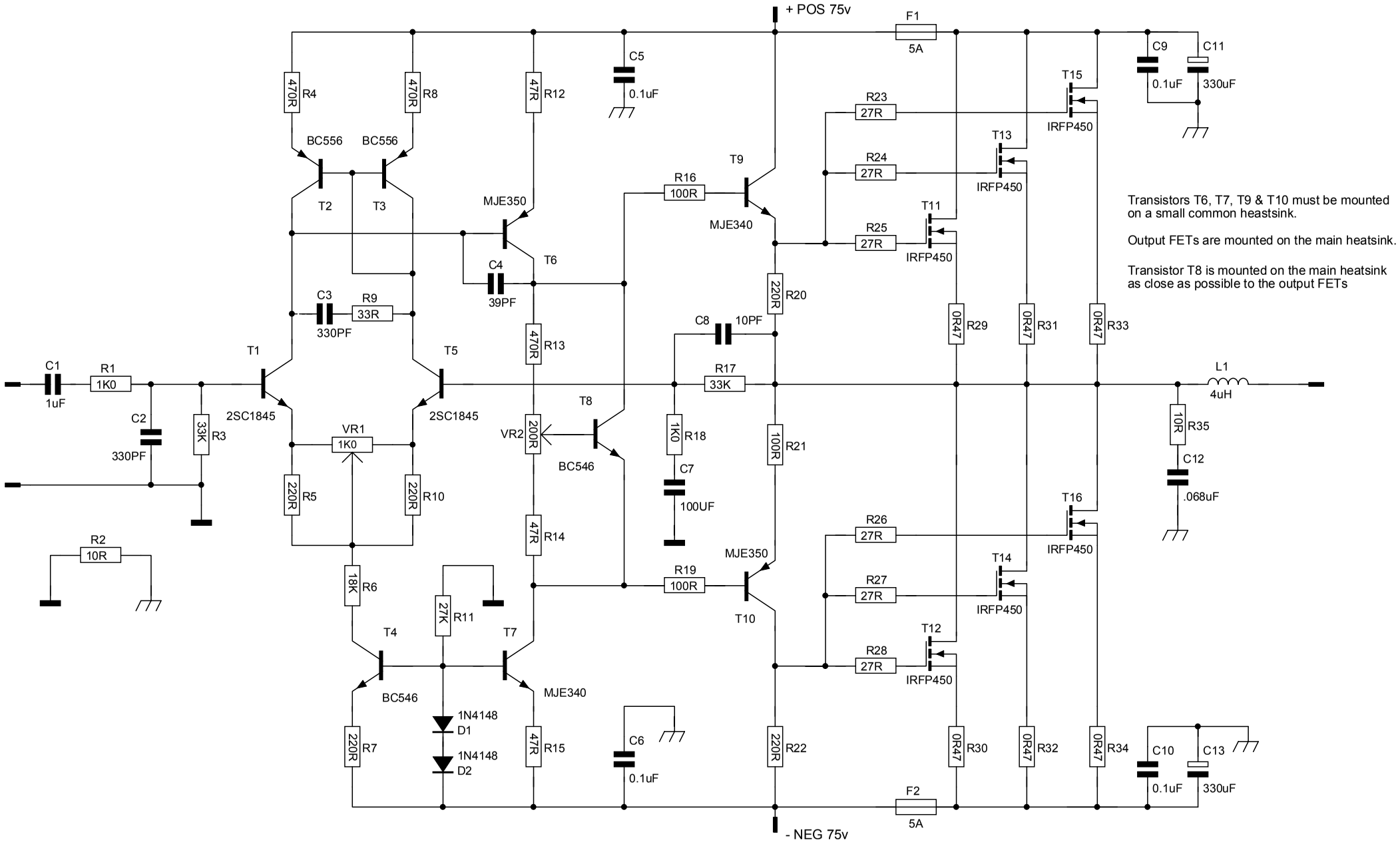
+ POS 75v
- NEG 75v
F1
5A
F2
5A
C5
0.1uF
C9
0.1uF
C11
330uF
C10
0.1uF
C13
330uF
C6
0.1uF
R4
470R
R8
470R
R12
47R
R13
470R
R14
47R
R15
47R
R16
100R
R17
33K
R18
1K0
R19
100R
R20
220R
R21
100R
R22
220R
R23
27R
R24
27R
R25
27R
R26
27R
R27
27R
R28
27R
R29
0R47
R30
0R47
R31
0R47
R32
0R47
R33
0R47
R34
0R47
R35
10R
L1
4uH
C12
.068uF
T15
IRFP450
T13
IRFP450
T11
IRFP450
T16
IRFP450
T14
IRFP450
T12
IRFP450
T9
MJE340
T10
MJE350
T6
MJE350
T7
MJE340
T8
BC546
T2
BC556
T3
BC556
T4
BC546
T1
2SC1845
T5
2SC1845
C4
39PF
C3
330PF
R9
33R
C8
10PF
C7
100UF
VR1
1K0
VR2
200R
R5
220R
R10
220R
R6
18K
R11
27K
R7
220R
D1
1N4148
D2
1N4148
C1
1uF
R1
1K0
C2
330PF
R3
33K
R2
10R
Transistors T6, T7, T9 & T10 must be mounted on a small common heastsink.
Output FETs are mounted on the main heatsink.
Transistor T8 is mounted on the main heatsink as close as possible to the output FETs