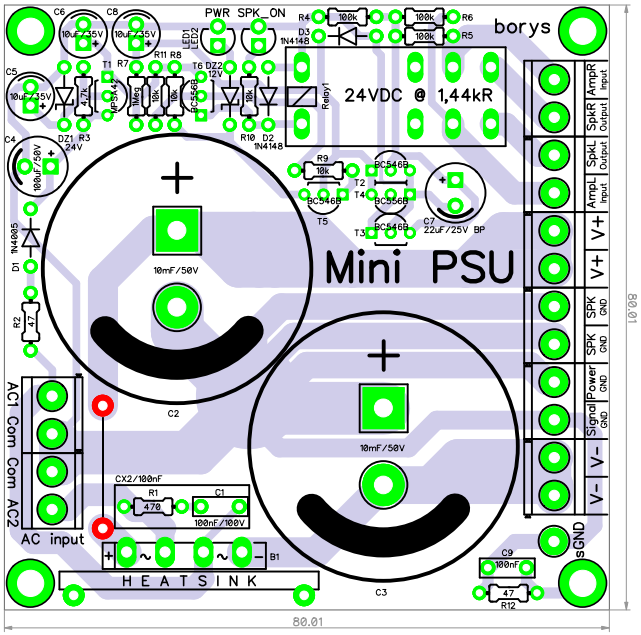
Mini PSU
borys
24VDC @ 1,44kR
PWR SPK_ON
C6 10uF/35V
C8 10uF/35V
C5 10uF/35V
C4 100uF/50V
D1 1N4005
R2 47
DZ1 R3 24V
T1 R7 4,7k
BC547
R11 R8 1Meg 10k 10k
T6 DZ2 12V
BC556B
R10 D2 IN4148
R4 100k
D3 IN4148
R6 100k
R5 100k
Relay1
R9 10k
BC546B
T2
T4
T5
T3
C7 22uF/25V BP
10mF/50V
C2
10mF/50V
C3
CX2/100nF
R1 470
C1 100nF/100V
B1
HEATSINK
AC input
AC1 Com Com AC2
C9 100nF
R12 47
SGND
V- V- Signal GND Power GND SPK GND SPK GND V+ V+ Ampl. Input SpkL Output SpkR Output AmpR Input
80.01
80.01