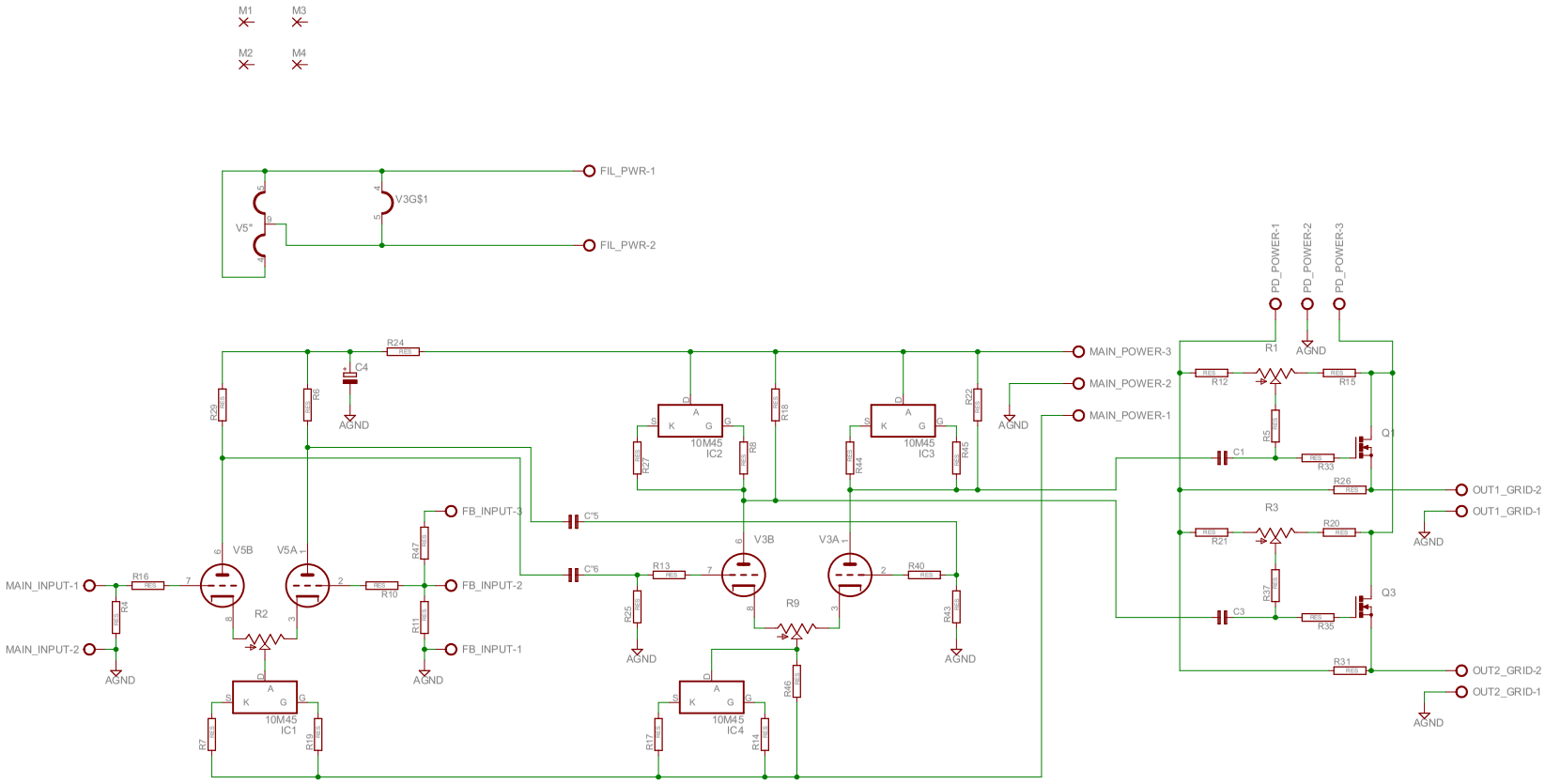
M1
M3
M2
M4
FIL_PWR-1
FIL_PWR-2
V5"
V3G$1
PD_POWER-1
PD_POWER-2
PD_POWER-3
AGND
R1
R24
C4
R29
R6
R18
R22
MAIN_POWER-3
MAIN_POWER-2
MAIN_POWER-1
10M45
IC2
IC3
IC1
IC4
R27
R8
R44
R45
R12
R15
R5
R33
C1
Q1
R26
OUT1_GRID-2
OUT1_GRID-1
R3
R21
R20
R37
R35
C3
Q3
R31
OUT2_GRID-2
OUT2_GRID-1
FB_INPUT-3
FB_INPUT-2
FB_INPUT-1
C"5
C"6
R47
R11
R10
R13
R40
R25
R49
R9
R46
R17
R14
R7
R19
V5B
V5A
V3B
V3A
R2
MAIN_INPUT-1
MAIN_INPUT-2
R16
R4