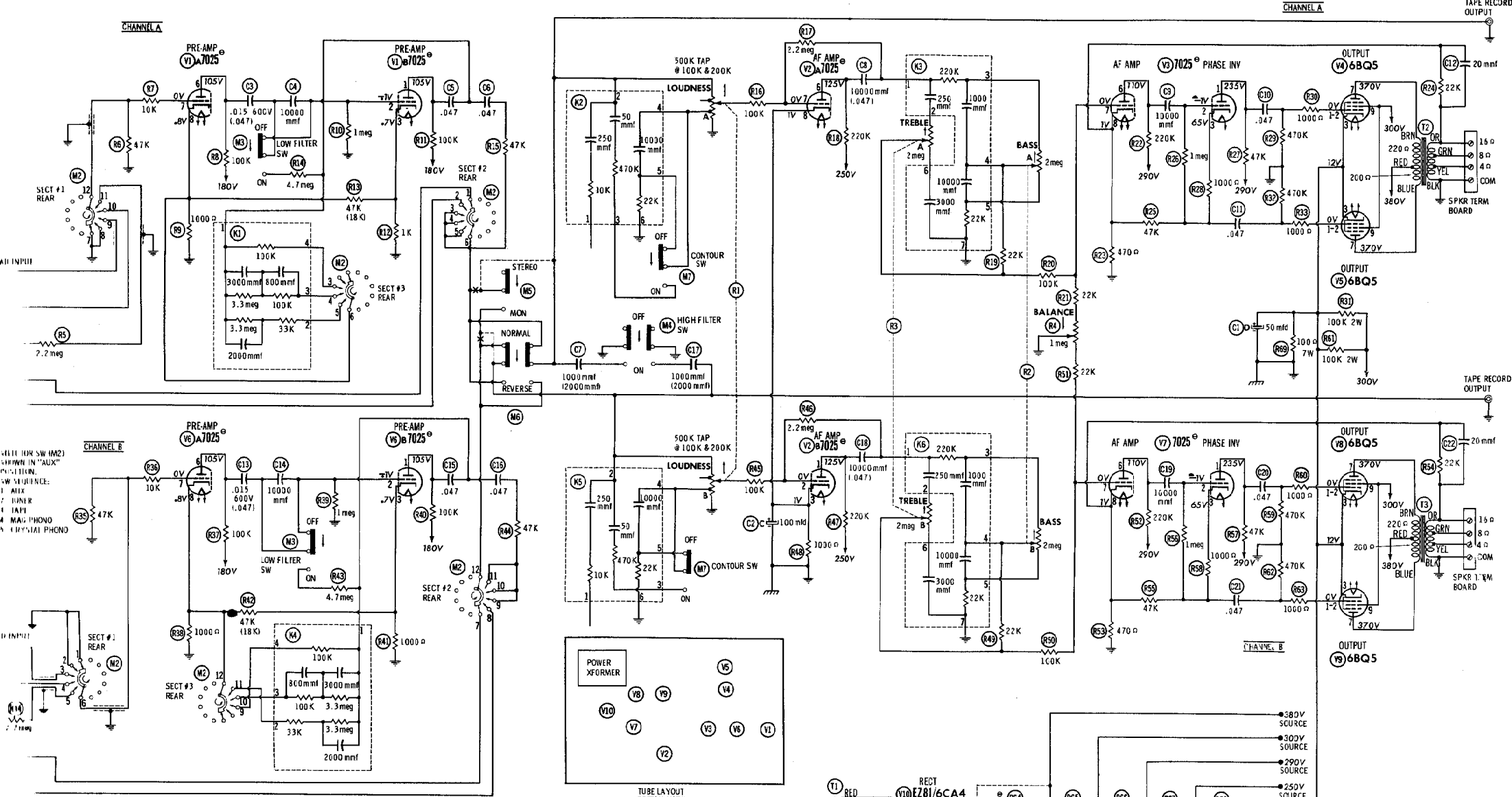

RESISTANCE READINGS

ITEM	TUBE	Pin 1	Pin 2	Pin 3	Pin 4	Pin 5	Pin 6	Pin 7	Pin 8	Pin 9
V1	7025	†135K	1meg	1000Ω	100Ω	100Ω	†135K	10K ■57K	1000Ω	100Ω
V2	7025	†233K	100K	1000Ω	100Ω	100Ω	†233K	100K	1000Ω	100Ω
V3	7025	†50K	1meg	48K	100Ω	100Ω	†230K	110K	470Ω	100Ω
V4	6BQ5	NC	470K	100Ω	100Ω	100Ω	TP	†245Ω	TP	†2500Ω
V5	6BQ5	NC	470K	100Ω	100Ω	100Ω	TP	†225Ω	TP	†2500Ω
V6	7025	†135K	1meg	1000Ω	100Ω	100Ω	†135K	10K ■57K	1000Ω	100Ω
V7	7025	†50K	1meg	48K	100Ω	100Ω	†230K	110K	470Ω	100Ω
V8	6BQ5	NC	470K	100Ω	100Ω	100Ω	TP	†245Ω	TP	†2500Ω
V9	6BQ5	NC	470K	100Ω	100Ω	100Ω	TP	†225Ω	TP	†2500Ω
V10	EZ81 6CA4	38Ω	NC	¶ 50K	100Ω	100Ω	NC	41Ω	NC	TP

ALL MEASUREMENTS MADE IN "AUX" OR "TUNER" POSITION UNLESS OTHERWISE DESIGNATED.
¶ THIS READING WILL VARY DEPENDING UPON THE CONDITION OF THE ELECTROLYTIC IN THE CIRCUIT.
■ MEASURED IN ANY POSITION OTHER THAN "AUX" OR "TUNER".
● MEASURED FROM CATHODE.
† MEASURED FROM PIN 1 OF V10.
NC NO CONNECTION
TP TO POINT

1. DC voltage measurements taken with vacuum tube voltmeter; AC voltages measured with 1000 ohm per volt voltmeter.
2. Socket connections are shown as bottom views.
3. Measured values are from socket pin to common ground.
4. Line voltage maintained at 117 volts for voltage readings.
5. Nominal tolerance of component values makes possible a variation of ±15% in voltage and resistance readings.
6. All controls at minimum, proper output load connected.

⊖ SEE PARTS LIST FOR ALTERNATE VALUE OR APPLICATION

DC COIL RESISTANCE VALUES UNDER ONE OHM NOT SHOWN ON SCHEMATIC DIAGRAM

ARROWS ON CONTROLS INDICATE CLOCKWISE ROTATION (CONTROL VIEWED FROM SHAFT END)