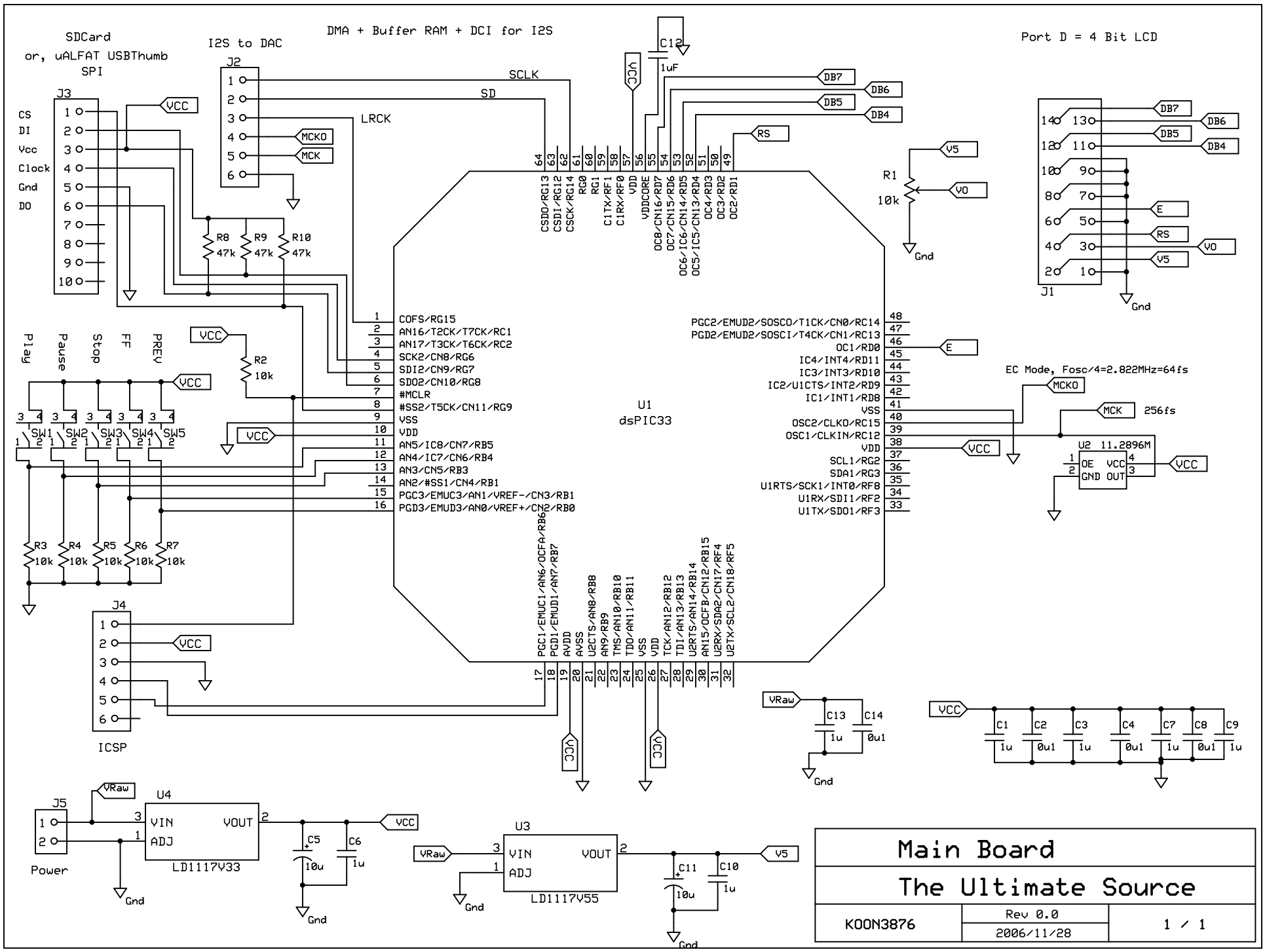
DMA + Buffer RAM + DCI for I2S
SDCard
or, uALFAT USBThumb
SPI
I2S to DAC
Port D = 4 Bit LCD
J3
CS
DI
Vcc
Clock
Gnd
DO
J2
SCLK
SD
LRCK
MCKO
MCK
VCC
C12
1uF
DB7
DB6
DB5
DB4
RS
V5
VO
R1
10k
Gnd
J1
E
R8
47k
R9
47k
R10
47k
Play
Pause
Stop
FF
PREV
R2
10k
SW1
SW2
SW3
SW4
SW5
R3
10k
R4
10k
R5
10k
R6
10k
R7
10k
U1
dsPIC33
COFS/RG15
AN16/T2CK/T7CK/RC1
AN17/T3CK/T6CK/RC2
SCK2/CN8/RG6
SDI2/CN9/RG7
SDO2/CN10/RG8
#MCLR
#SS2/T5CK/CN11/RG9
VSS
VDD
AN5/IC8/CN7/RB5
AN4/IC7/CN6/RB4
AN3/CN5/RB3
AN2/#SS1/CN4/RB1
PGC3/EMUC3/AN1/VREF-/CN3/RB1
PGD3/EMUD3/AN0/VREF+/CN2/RB0
PGC2/EMUD2/SOSCO/T1CK/CN0/RC14
PGD2/EMUD2/SOSCI/T4CK/CN1/RC13
OC1/RD0
IC4/INT4/RD11
IC3/INT3/RD10
IC2/U1CTS/INT2/RD9
IC1/INT1/RD8
OSC2/CLKO/RC15
OSC1/CLKIN/RC12
SCL1/RG2
SDA1/RG3
U1RTS/SCK1/INT0/RF8
U1RX/SDI1/RF2
U1TX/SDO1/RF3
EC Mode, Fosc/4=2.822MHz=64fs
256fs
U2 11.2896M
OE
VCC
GND
OUT
J4
ICSP
VRaw
C13
1u
C14
0u1
C1
1u
C2
0u1
C3
1u
C4
0u1
C7
1u
C8
0u1
C9
1u
J5
Power
U4
VIN
ADJ
VOUT
LD1117V33
C5
10u
C6
1u
U3
LD1117V55
C11
10u
C10
1u
Main Board
The Ultimate Source
KOON3876
Rev 0.0
2006/11/28
1 / 1