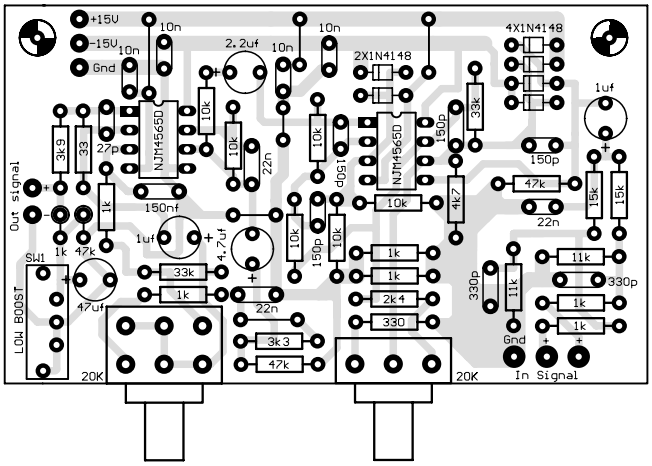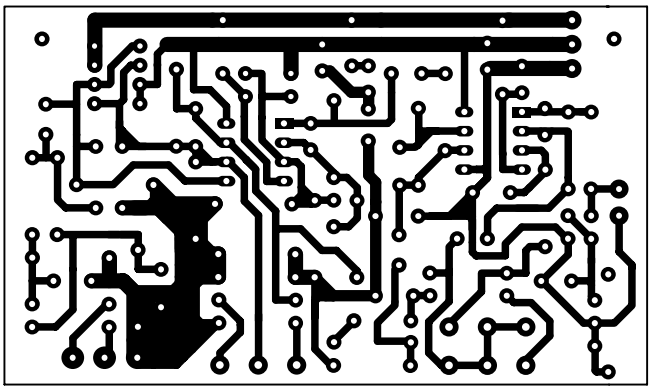
+15V
-15V
Gnd
10n
10n
2.2uf
10n
10n
2X1N4148
4X1N4148
1uf
NJM4565D
NJM4565D
3k9
33
27p
10k
10k
22n
10k
150p
150p
33k
150p
47k
15k
15k
22n
Out signal
1k
150nf
10k
4k7
1uf
4.7uf
10k
150p
10k
1k
1k
2k4
330
11k
330p
11k
330p
1k
1k
SW1
1k
47k
47uf
33k
1k
22n
3k3
47k
LOW BOOST
20K
20K
Gnd
In Signal