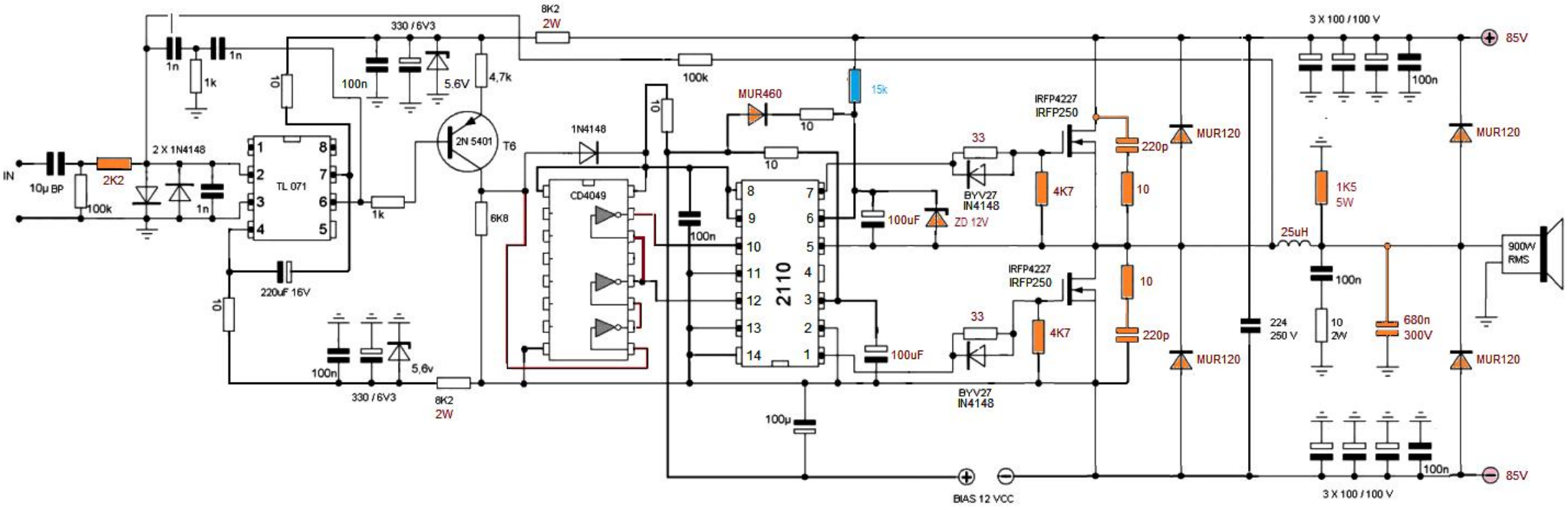
IN
10µ BP
100k
2K2
2 X 1N4148
1n
1k
TL 071
220uF 16V
10
100n
330 / 6V3
5,6V
4,7k
2N 5401
T6
6K8
1k
8K2
2W
100k
1N4148
CD4049
MUR460
15k
2110
100uF
ZD 12V
BYV27
IN4148
33
IRFP4227
IRFP250
4K7
220p
MUR120
25uH
1K5
5W
680n
300V
224
250 V
900W
RMS
3 X 100 / 100 V
85V
BIAS 12 VCC
100µ
5,6v

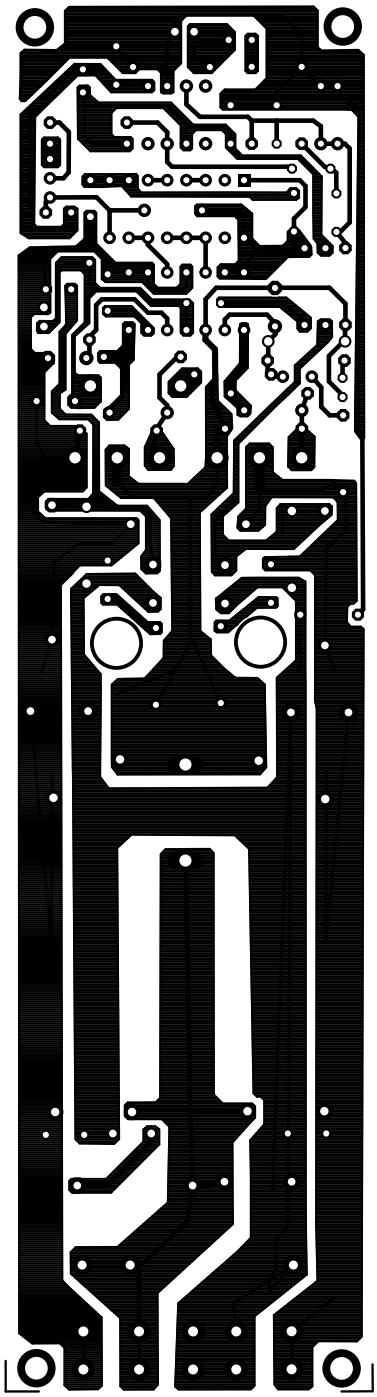

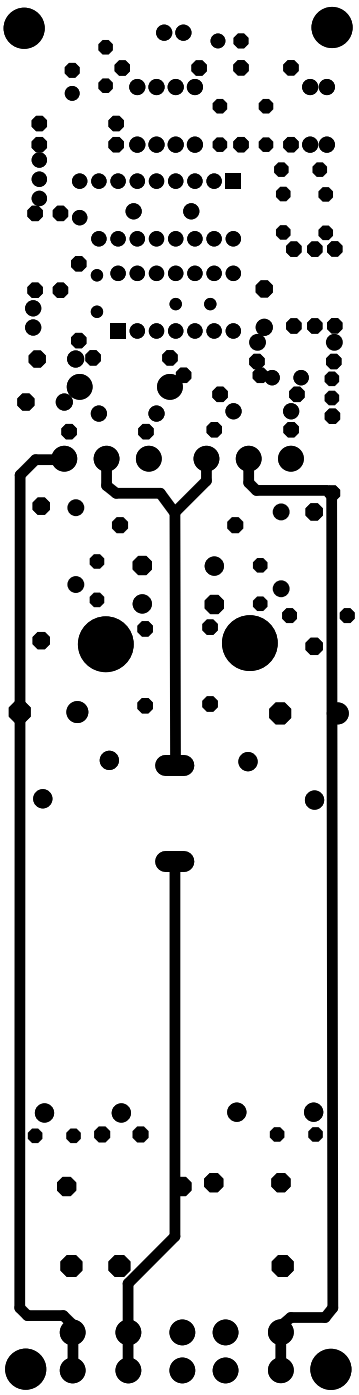

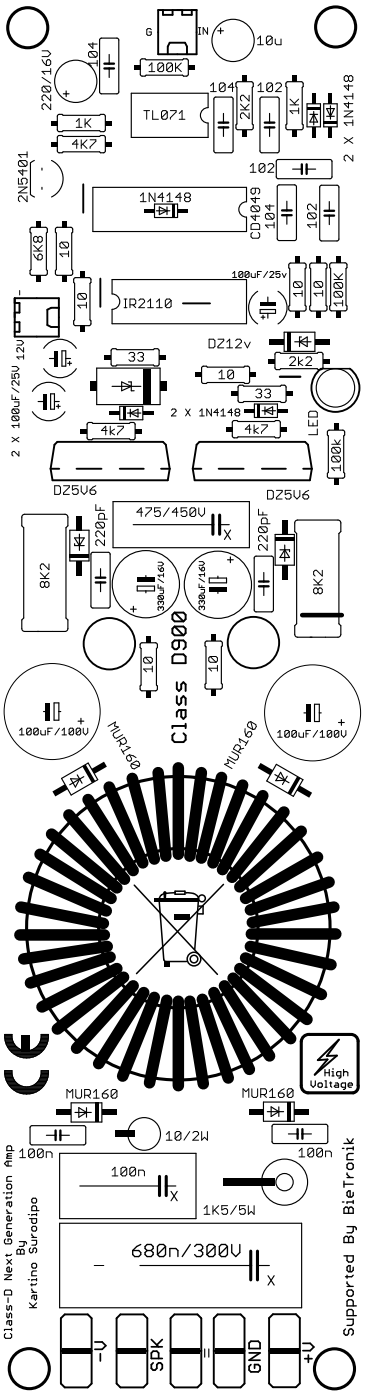
Class D900
Class-D Next Generation Amp
By
Kartino Surodipo
Supported By BieTronik
High Voltage
CE
-V
SPK
-
GND
+V
IN
G
10u
100K
104
220/16V
TL071
1K
4K7
2K2
102
2 X 1N4148
2N5401
1N4148
CD4049
6K8
10
IR2110
100uF/25v
100K
DZ12v
2k2
33
2 X 100uF/25V
12V
LED
DZ5V6
475/450V
220pF
8K2
330uF/16V
100uF/100V
MUR160
10/2W
100n
1K5/5W
680n/300V