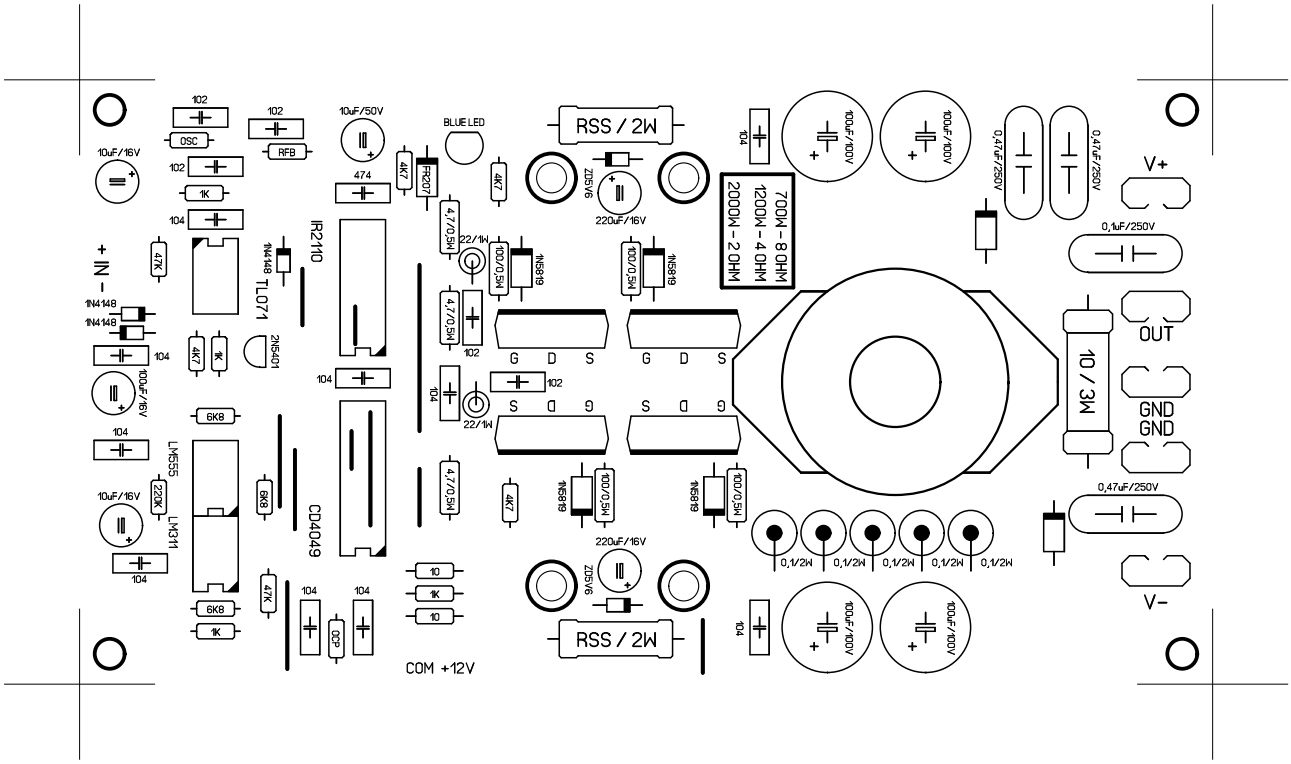

RSS / 2W
BLUE LED
IR2110
TL071
CD4049
LM555
LM311
COM +12V
700W - 8 OHM
1200W - 4 OHM
2000W - 2 OHM
10 / 3W
V+
V-
OUT
GND
GND
+ IN -

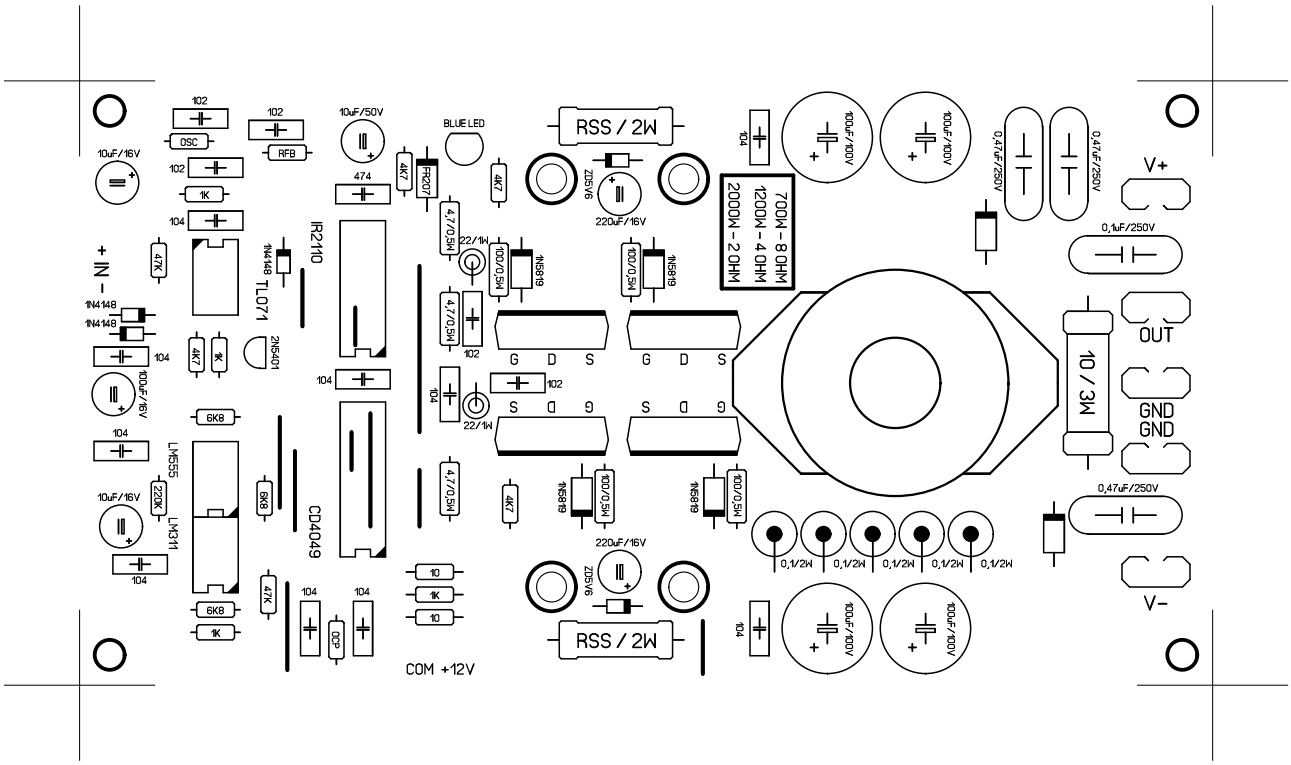

RSS / 2W
BLUE LED
IR2110
TL071
CD4049
LM555
LM311
COM +12V
700W - 8 OHM
1200W - 4 OHM
2000W - 2 OHM
10 / 3W
V+
V-
OUT
GND
GND
+ IN -