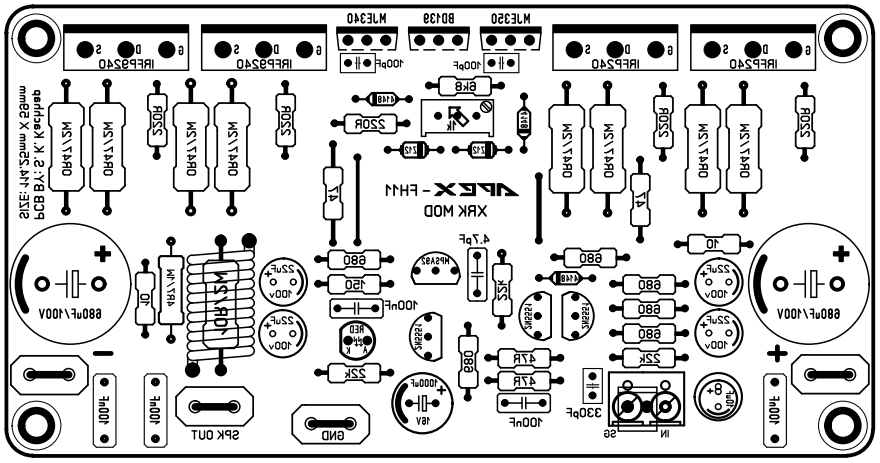
APEX - FH11
XRK MOD
SPK OUT
GND
IN
SS
IRFP240
MJE340
BD139
MJE350
680uF/100V
330pF
100nF
4.7pF
22K
680
150
22uF
100V
10