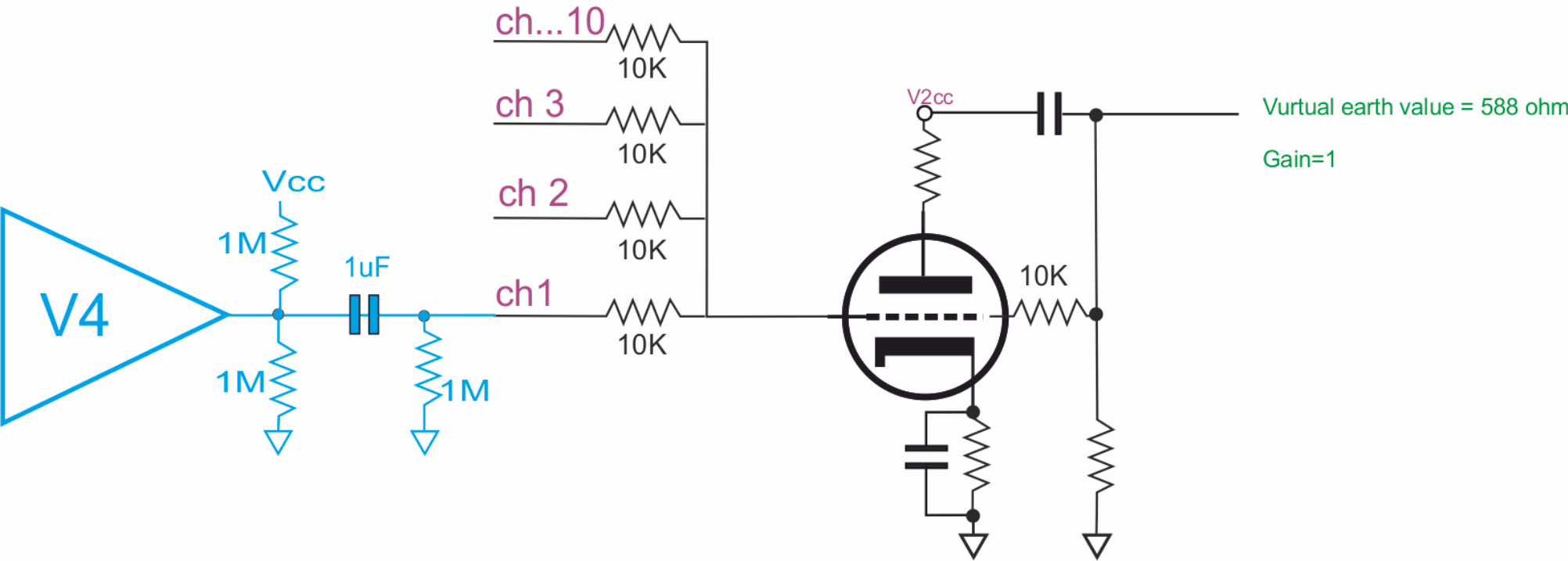vocal and bass sections