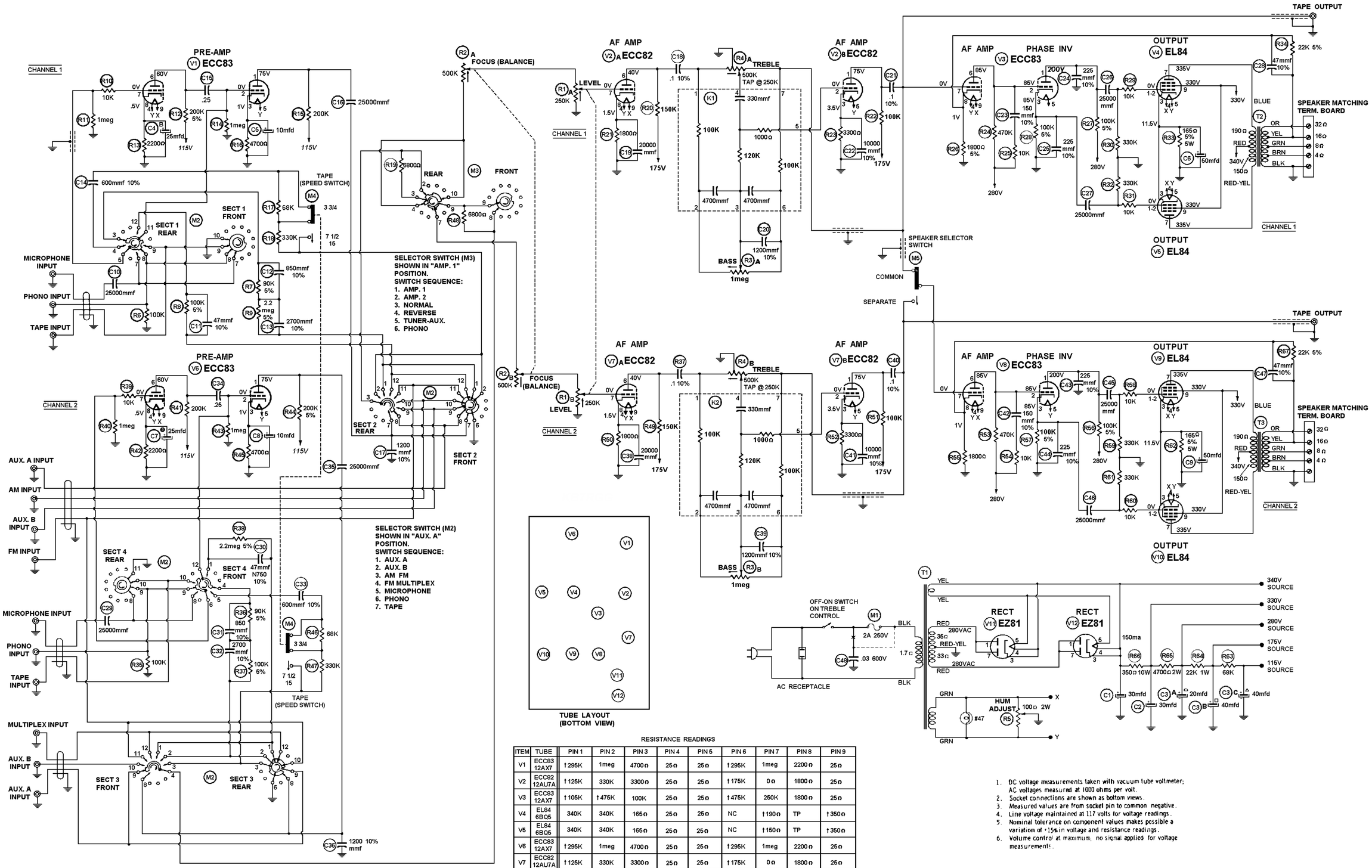

RESISTANCE READINGS

ITEM	TUBE	PIN 1	PIN 2	PIN 3	PIN 4	PIN 5	PIN 6	PIN 7	PIN 8	PIN 9
V1	ECC83 12AX7	†295K	1meg	4700Ω	25Ω	25Ω	†295K	1meg	2200Ω	25Ω
V2	ECC82 12AU7A	†125K	330K	3300Ω	25Ω	25Ω	†175K	0Ω	1800Ω	25Ω
V3	ECC83 12AX7	†105K	†475K	100K	25Ω	25Ω	†475K	250K	1800Ω	25Ω
V4	EL84 6BQ5	340K	340K	165Ω	25Ω	25Ω	NC	†190Ω	TP	†350Ω
V5	EL84 6BQ5	340K	340K	165Ω	25Ω	25Ω	NC	†150Ω	TP	†350Ω
V6	ECC83 12AX7	†295K	1meg	4700Ω	25Ω	25Ω	†295K	1meg	2200Ω	25Ω
V7	ECC82 12AU7A	†125K	330K	3300Ω	25Ω	25Ω	†175K	0Ω	1800Ω	25Ω
V8	ECC83 12AX7	†105K	†475K	100K	25Ω	25Ω	†475K	250K	1800Ω	25Ω
V9	EL84 6BQ5	340K	340K	165Ω	25Ω	25Ω	TP	†190Ω	TP	†350Ω
V10	EL84 6BQ5	340K	340K	165Ω	25Ω	25Ω	TP	†150Ω	NC	†350Ω
V11	EZ81 6CA4	35Ω	NC	¶	¶	¶	NC	35Ω	NC	NC
V12	EZ81 6CA4	33Ω	NC	¶	¶	¶	NC	33Ω	NC	NC

¶ THIS READING WILL VARY DEPENDING UPON THE CONDITION OF THE ELECTROLYTIC IN THE CIRCUIT.
† MEASURED FROM PIN 3 OF V12.
NC NO CONNECTION
TP TIE POINT

1. DC voltage measurements taken with vacuum tube voltmeter; AC voltages measured at 1000 ohms per volt.
2. Socket connections are shown as bottom views.
3. Measured values are from socket pin to common negative.
4. Line voltage maintained at 117 volts for voltage readings.
5. Nominal tolerance on component values makes possible a variation of ±15% in voltage and resistance readings.
6. Volume control at maximum, no signal applied for voltage measurements.

DC COIL RESISTANCE VALUES UNDER ONE OHM NOT SHOWN ON SCHEMATIC DIAGRAM

ARROWS ON CONTROLS INDICATE CLOCKWISE ROTATION (CONTROL VIEWED FROM SHAFT END)

EICO
MODEL HF-81