DX2K-UcD Discrete Class D Amplifier v.3 FINAL
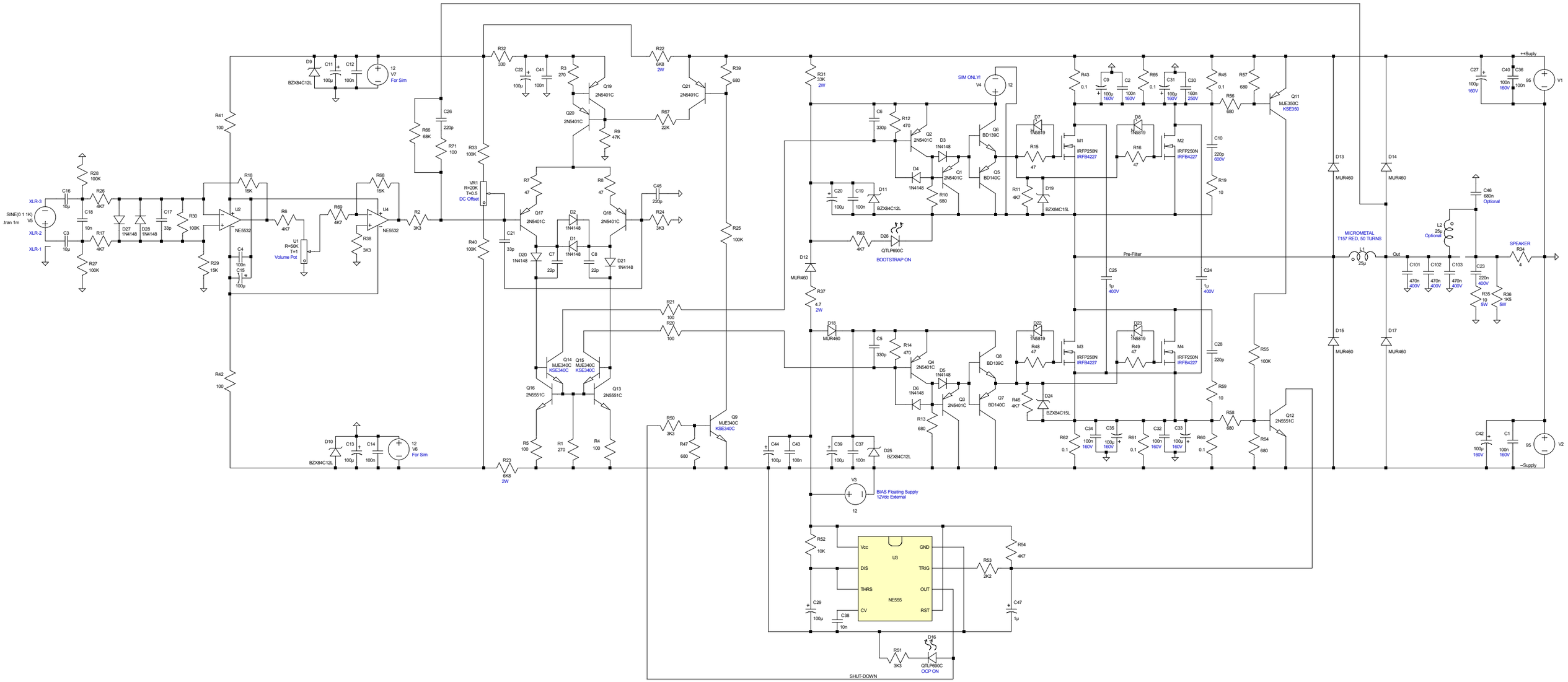
Kartino Surodipo, Jan.2015