DX BLAME ES

© 2009 Carlos Mergulhão

Rev. Dec. 25, 2009

Schematic By Todd A. Johnson (taj)

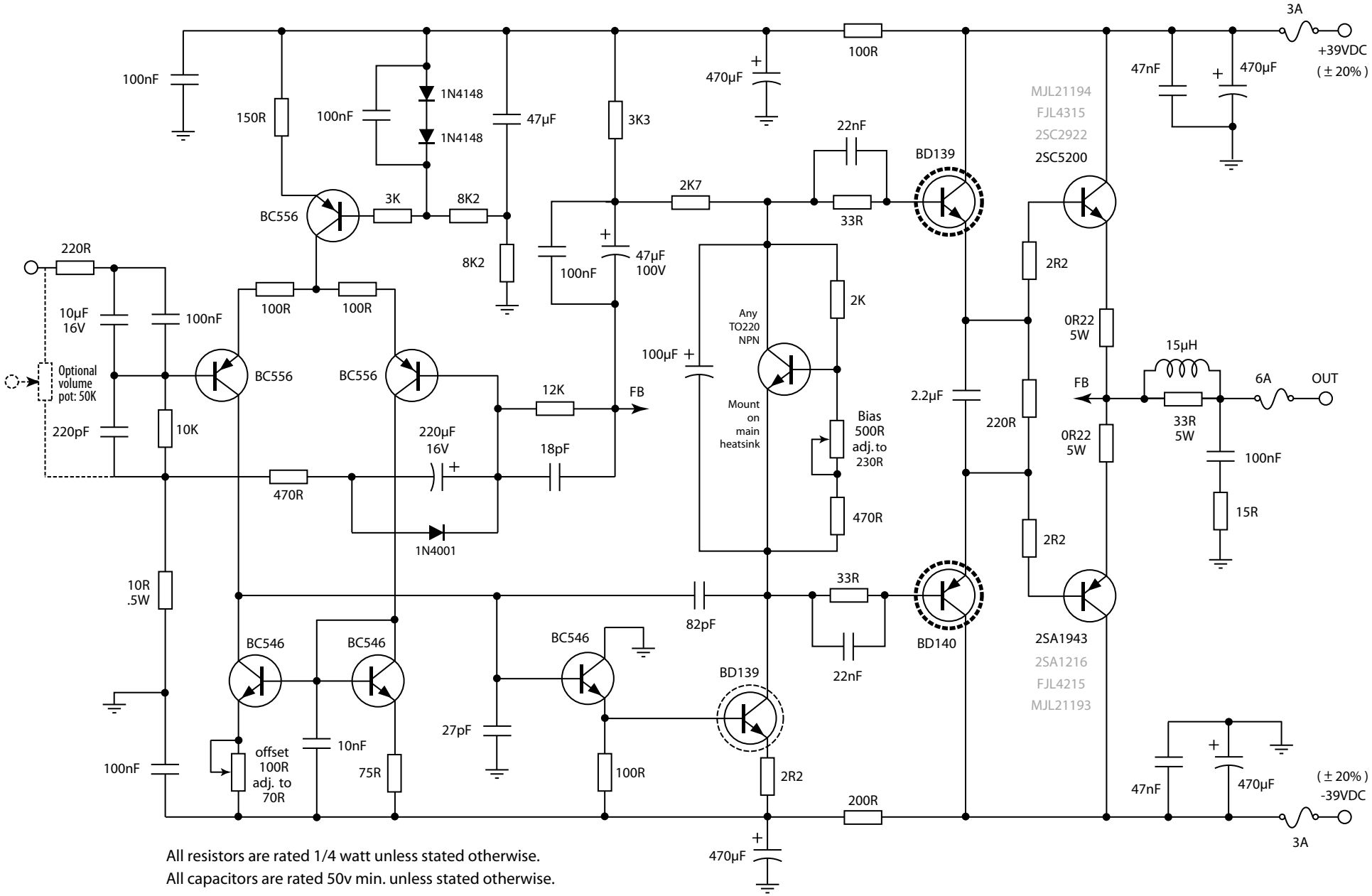

All resistors are rated 1/4 watt unless stated otherwise.
All capacitors are rated 50v min. unless stated otherwise.