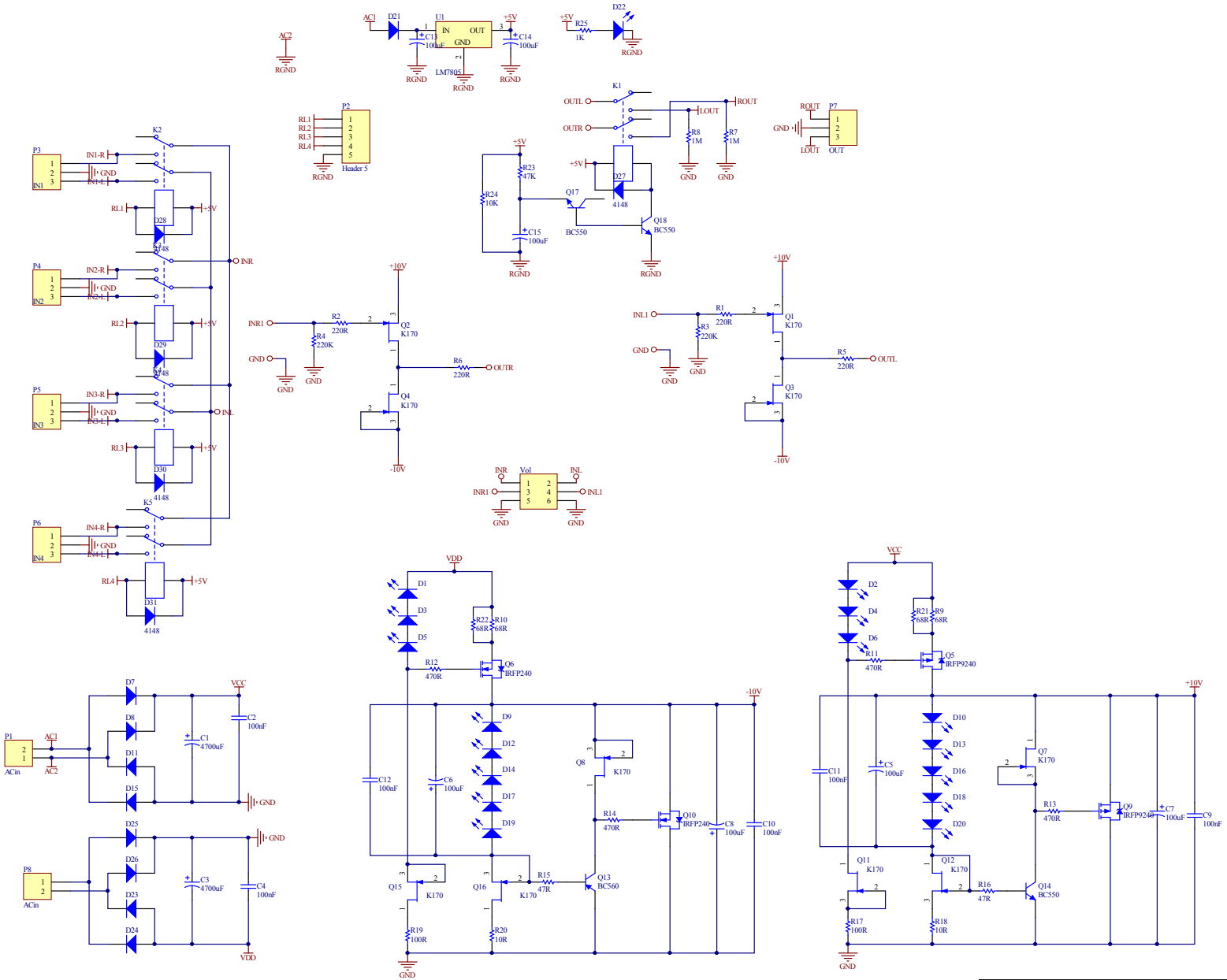

Title		
Size A	Number	Revision
Date: 7/20/2009	Sheet of	
File: C:\Users\..\B12 pot.SchDoc	Drawn By:	