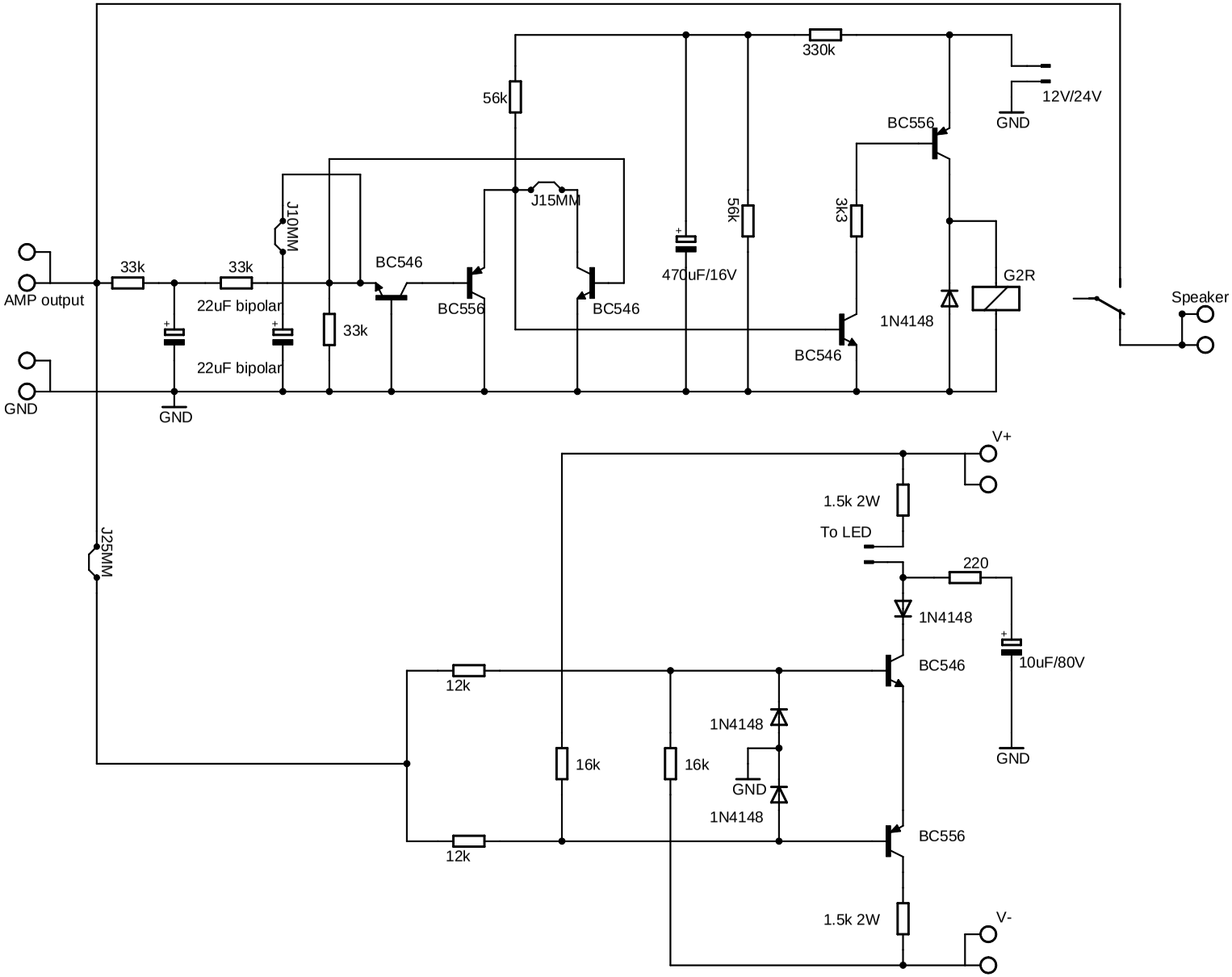DC DETECT AND CLIPP INDICATOR CIRCUIT