5.-SCHEMATIC DIAGRAMS

5.1.- The following circuit is common to all 4 amplifiers:

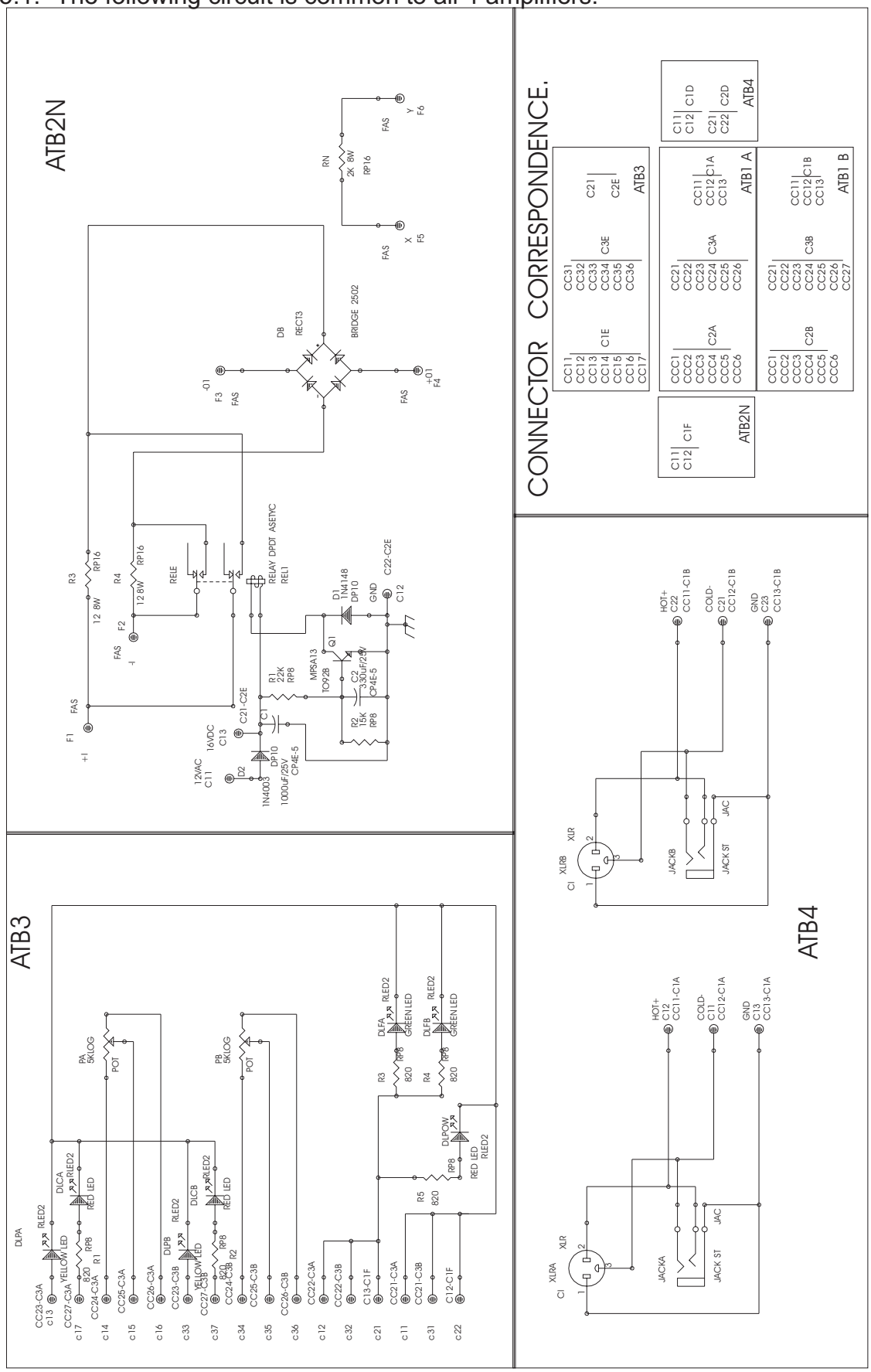

5.2.- Following are the remaining circuits for each model.

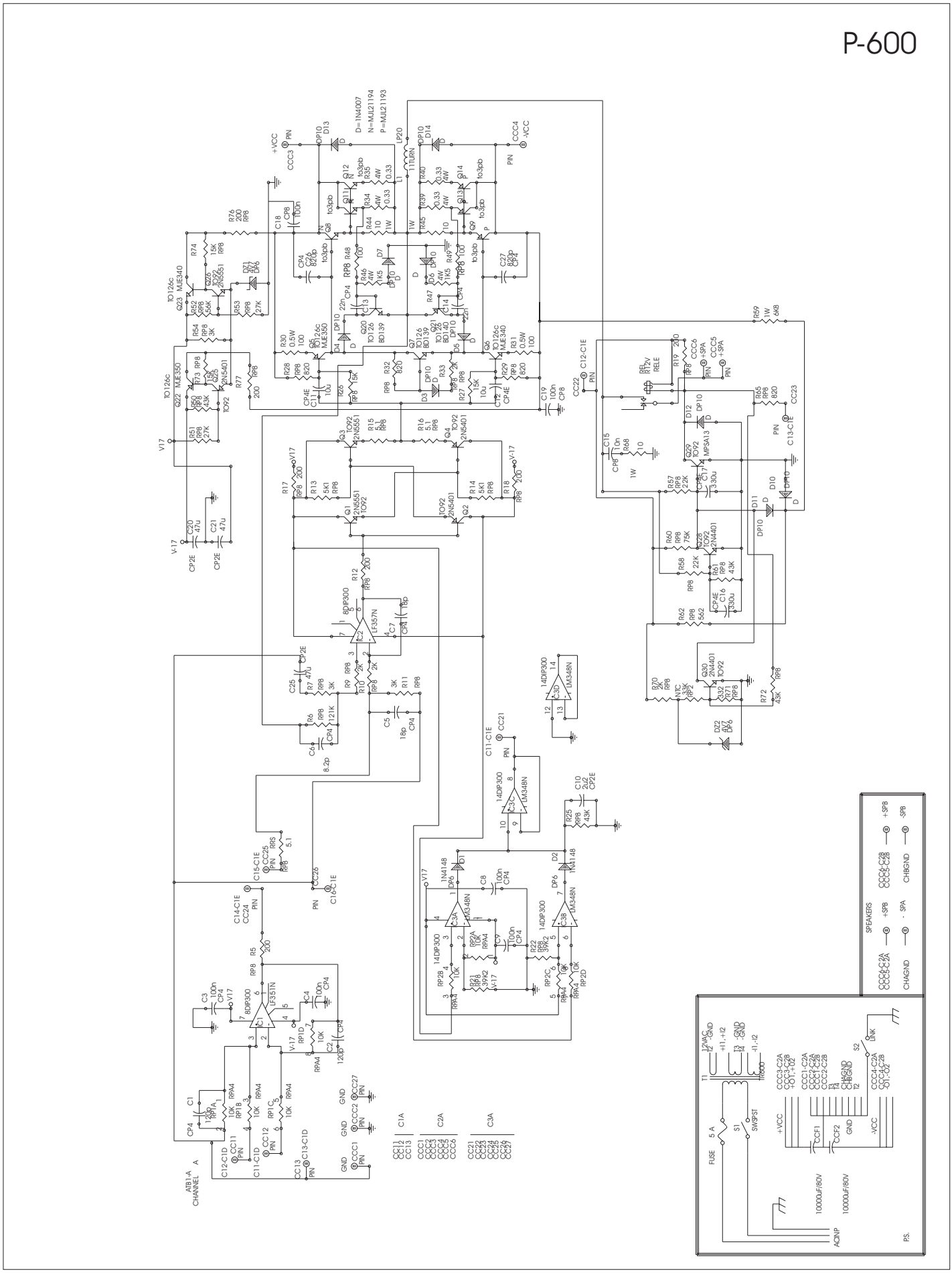
P-600
D=1N4007
N=MJL21194
P=MJL21193
SPEAKERS
CHAGND
FUSE 5 A
S1
SW3PST
AC/NP
P.S.

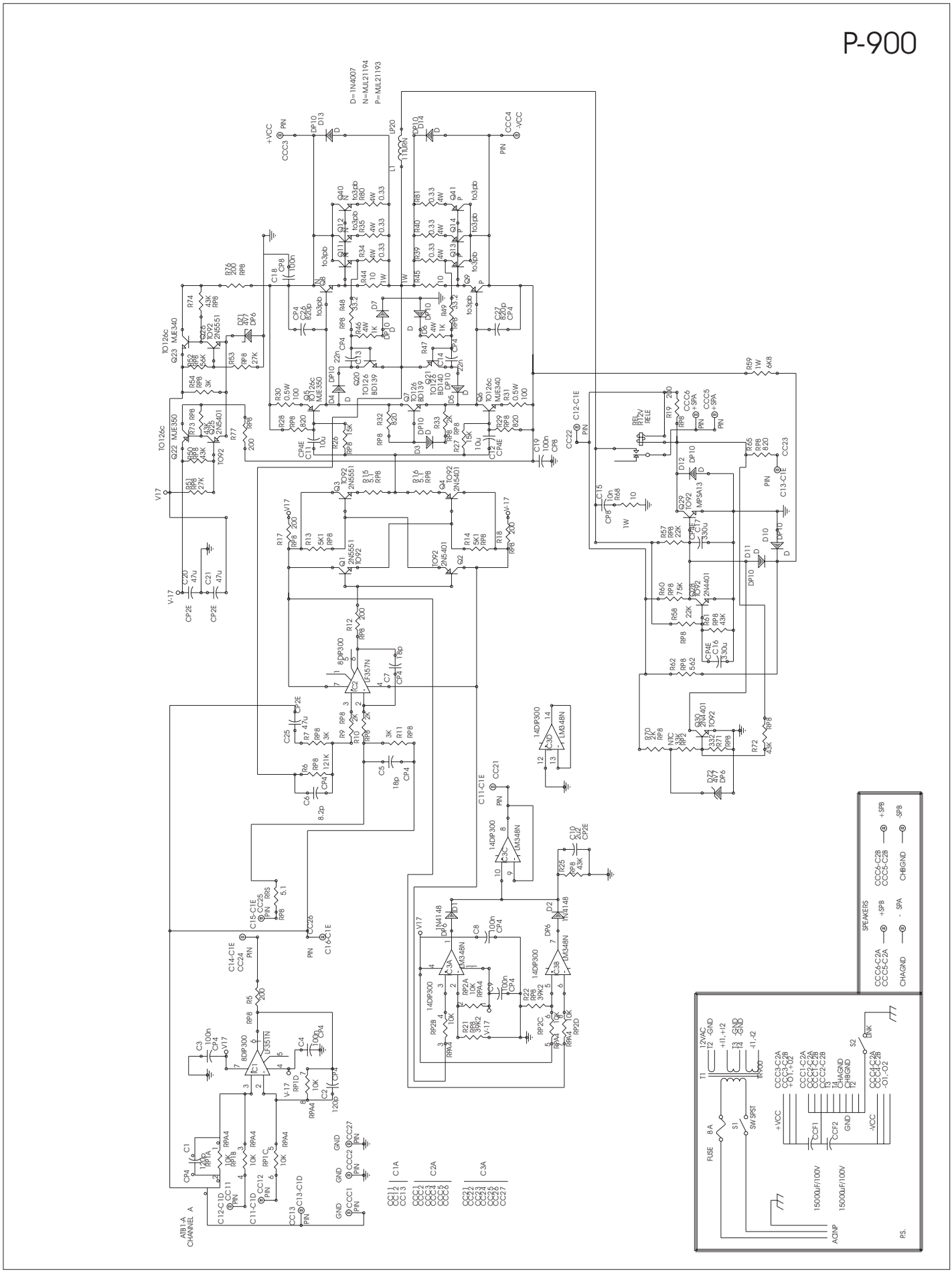
P-900
D=1N4007
N=MJL21194
P=MJL21193
SPEAKERS
CHAGND
-SPA
+SPB
-SPB
FUSE
8A
SW SPST
AC INP
1500uF/100V
1500uF/100V
P.S.

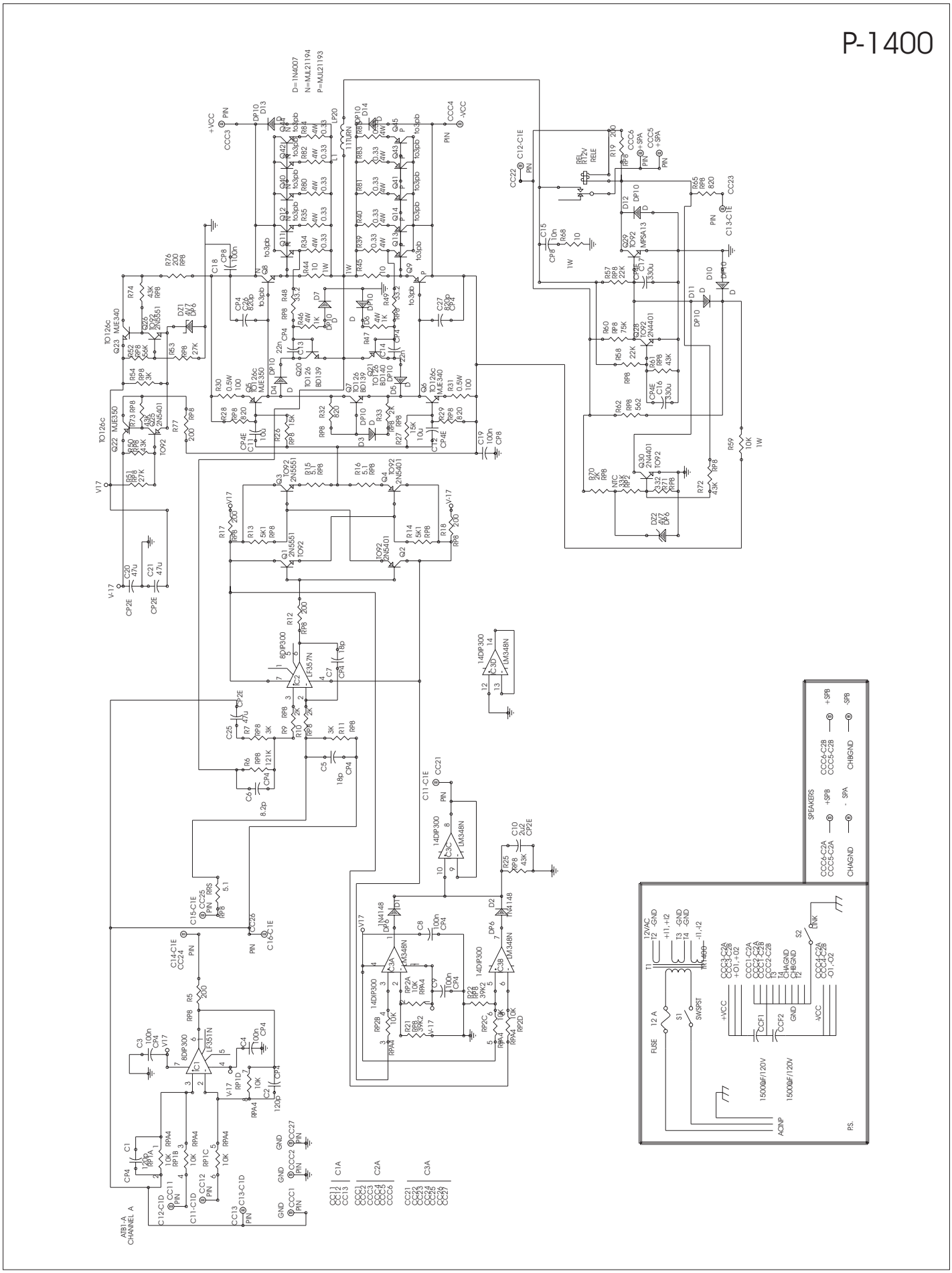
P-1400
D=1N4007
N=MJL21194
P=MJL21193
SPEAKERS
CHAGND
FUSE 12 A
S1
SWSPST
15000uF/120V
ACINP
P.S.

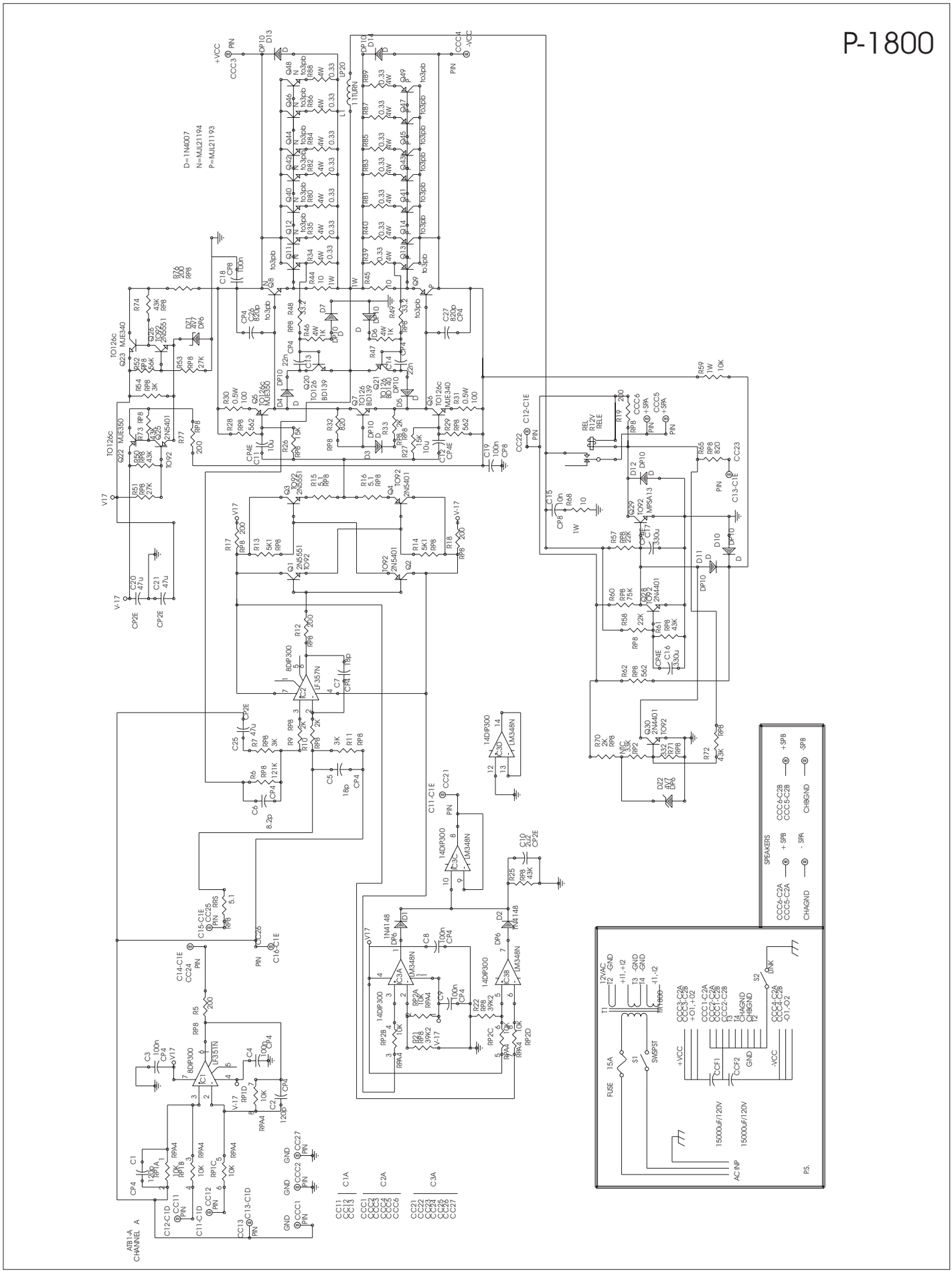
P-1800
D=1N4007
N=MJL21194
P=MJL21193
SPEAKERS
FUSE 15A
S1 SW5PST
S2 LINK
15000uF/120V
AC INP
RS.
CHANNEL A