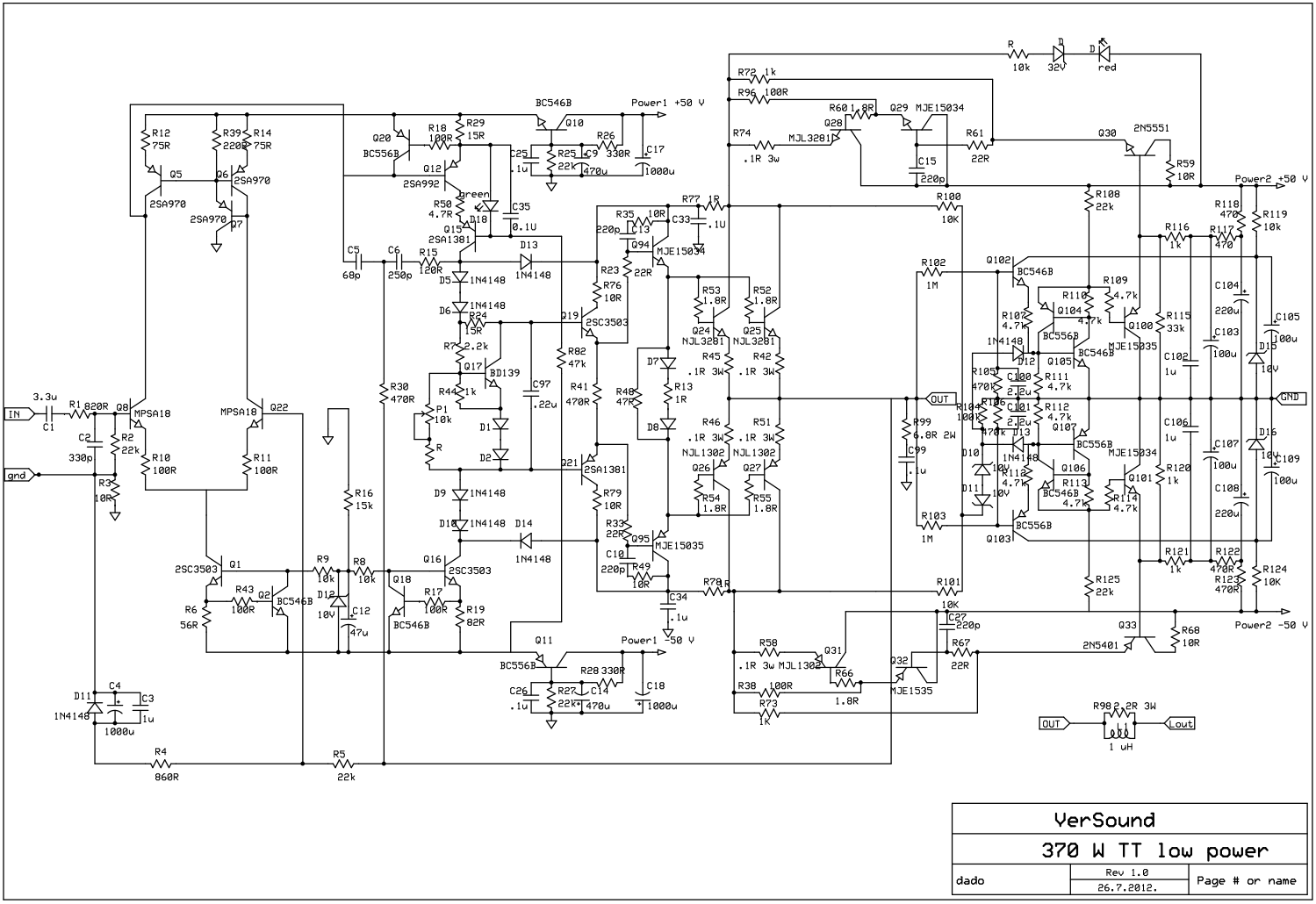

o\Audio\DadoAmp\TT\DADO-TT\DADO-TT-TRIPLE-MPSA18-Cmult\DADO-TT-TRIPLE-MPSA18-Cmult-lowpower.sch - S