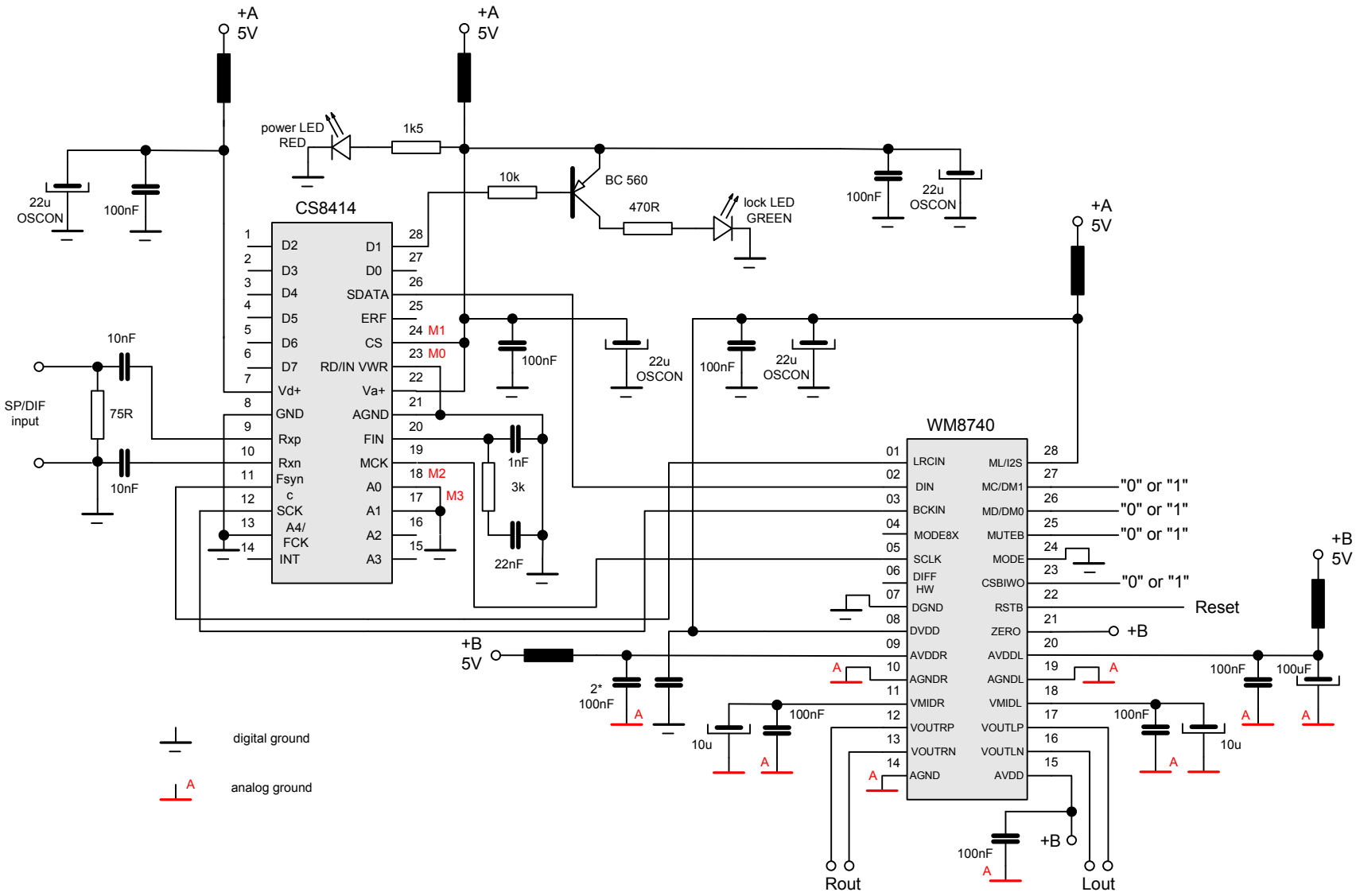
+A
5V
power LED
RED
1k5
10k
BC 560
470R
lock LED
GREEN
22u
OSCON
100nF
CS8414
D2
D3
D4
D5
D6
D7
Vd+
GND
Rxp
Rxn
Fsyn
c
SCK
A4/
FCK
INT
D1
D0
SDATA
ERF
CS
RD/IN VWR
Va+
AGND
FIN
MCK
A0
A1
A2
A3
M1
M0
M2
M3
10nF
SP/DIF
input
75R
1nF
3k
22nF
WM8740
LRCIN
DIN
BCKIN
MODE8X
SCLK
DIFF
HW
DGND
DVDD
AVDDR
AGNDR
VMIDR
VOUTRP
VOUTRN
AGND
ML/I2S
MC/DM1
MD/DM0
MUTEB
MODE
CSBIWO
RSTB
ZERO
AVDDL
AGNDL
VMIDL
VOUTLP
VOUTLN
AVDD
"0" or "1"
Reset
+B
+B
5V
2*
100nF
10u
100uF
Rout
Lout
digital ground
analog ground