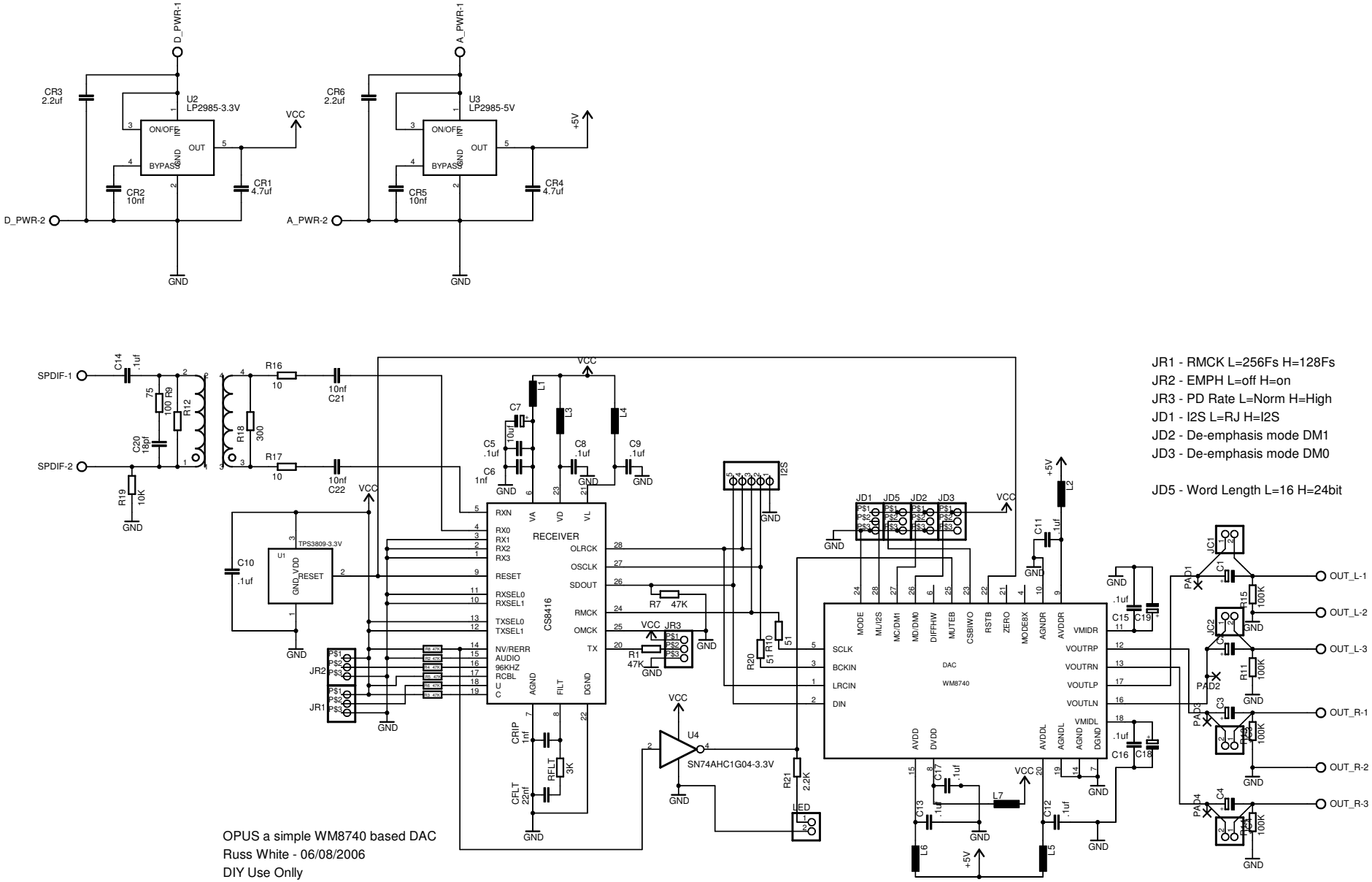

JR1 - RMCK L=256Fs H=128Fs
JR2 - EMPH L=off H=on
JR3 - PD Rate L=Norm H=High
JD1 - I2S L=RJ H=I2S
JD2 - De-emphasis mode DM1
JD3 - De-emphasis mode DM0

JD5 - Word Length L=16 H=24bit

OPUS a simple WM8740 based DAC
Russ White - 06/08/2006
DIY Use Onlly