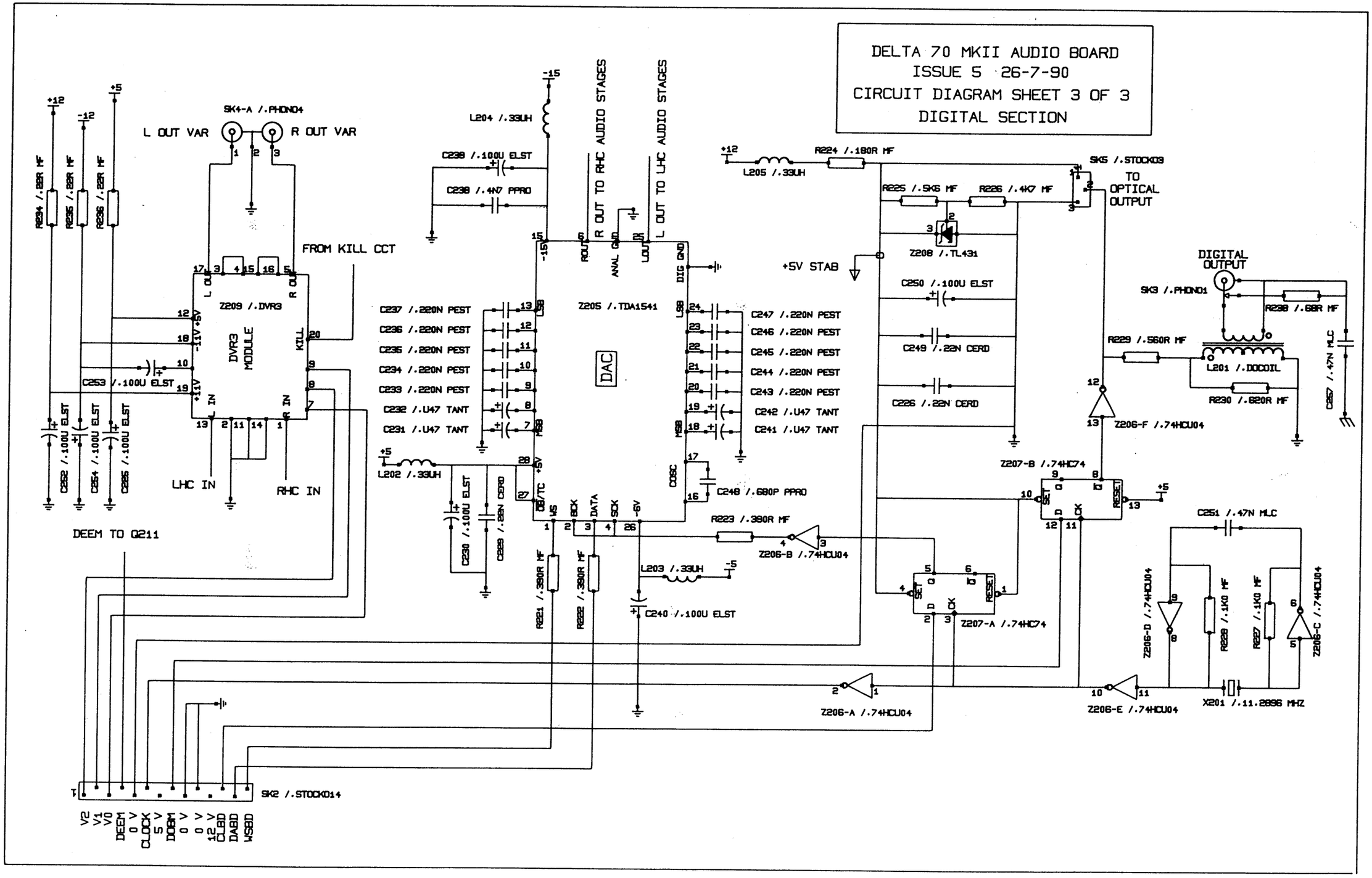
DELTA 70 MKII AUDIO BOARD
ISSUE 5 26-7-90
CIRCUIT DIAGRAM SHEET 3 OF 3
DIGITAL SECTION
SK4-A /.PHONO4
L OUT VAR
R OUT VAR
R234 /.22R MF
R235 /.22R MF
R236 /.22R MF
FROM KILL CCT
Z209 /.DVR3
DVR3 MODULE
C253 /.100U ELST
C252 /.100U ELST
C254 /.100U ELST
C255 /.100U ELST
LHC IN
RHC IN
DEEM TO Q211
L204 /.33UH
C239 /.100U ELST
C238 /.4N7 PPRO
R OUT TO RHC AUDIO STAGES
L OUT TO LHC AUDIO STAGES
Z205 /.TDA1541
DAC
C237 /.220N PEST
C236 /.220N PEST
C235 /.220N PEST
C234 /.220N PEST
C233 /.220N PEST
C232 /.U47 TANT
C231 /.U47 TANT
C247 /.220N PEST
C246 /.220N PEST
C245 /.220N PEST
C244 /.220N PEST
C243 /.220N PEST
C242 /.U47 TANT
C241 /.U47 TANT
L202 /.33UH
C230 /.100U ELST
C229 /.22N CERD
C248 /.680P PPRO
R223 /.390R MF
Z206-B /.74HCU04
R221 /.390R MF
R222 /.390R MF
L203 /.33UH
C240 /.100U ELST
L205 /.33UH
R224 /.180R MF
SK5 /.STOCK03
TO OPTICAL OUTPUT
R225 /.5K6 MF
R226 /.4K7 MF
Z208 /.TL431
+5V STAB
C250 /.100U ELST
C249 /.22N CERD
C226 /.22N CERD
DIGITAL OUTPUT
SK3 /.PHONO1
R238 /.68R MF
R229 /.560R MF
L201 /.DOCOIL
R230 /.820R MF
C257 /.47N MLC
Z206-F /.74HCU04
Z207-B /.74HC74
Z207-A /.74HC74
C251 /.47N MLC
Z206-D /.74HCU04
R228 /.1K0 MF
R227 /.1K0 MF
Z206-C /.74HCU04
X201 /.11.2896 MHZ
Z206-E /.74HCU04
Z206-A /.74HCU04
SK2 /.STOCK014
V2
V1
V0
DEEM
0 V
CLOCK
5 V
DOBM
0 V
0 V
12
CLBD
DABD
WSBD