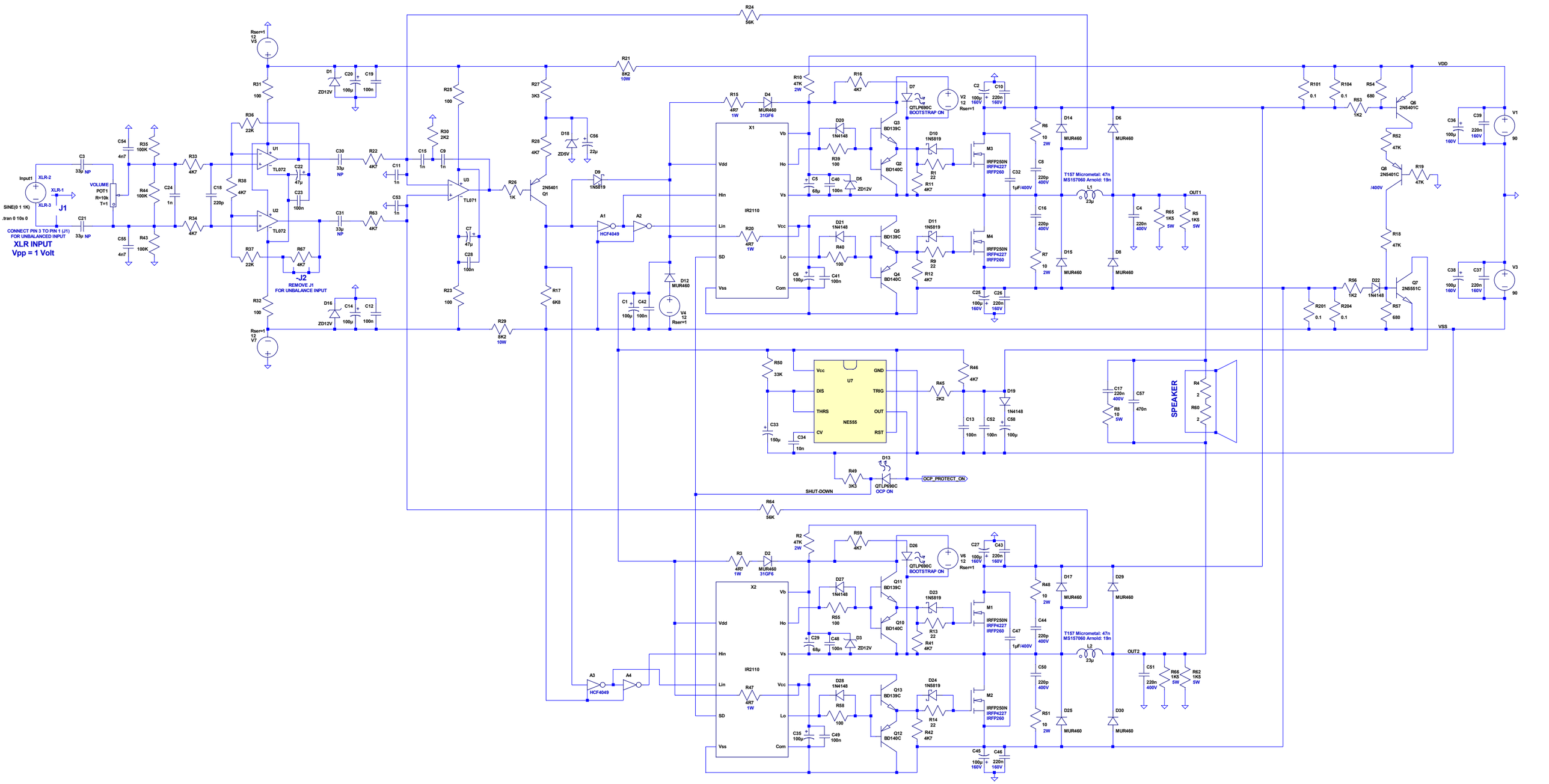

D2KFB Full Bridge Class D Amplifier v.2

Kartino Surodipo Dec. 2016

--- C:\Users\MiniPC\Desktop\Class D\D2KNeo - Fullbridge\D2KFB - Fullbridge V.2.asc ---