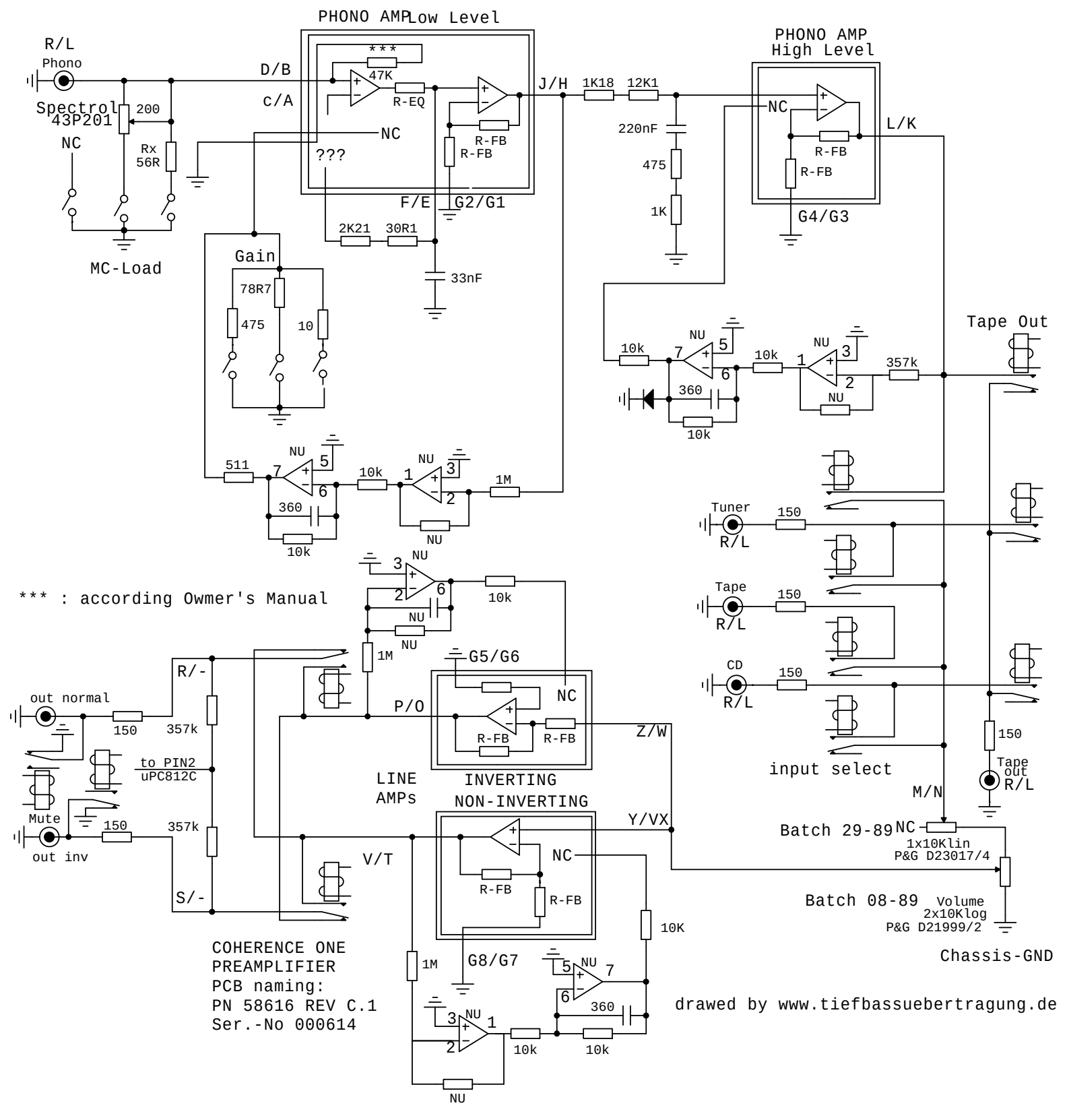

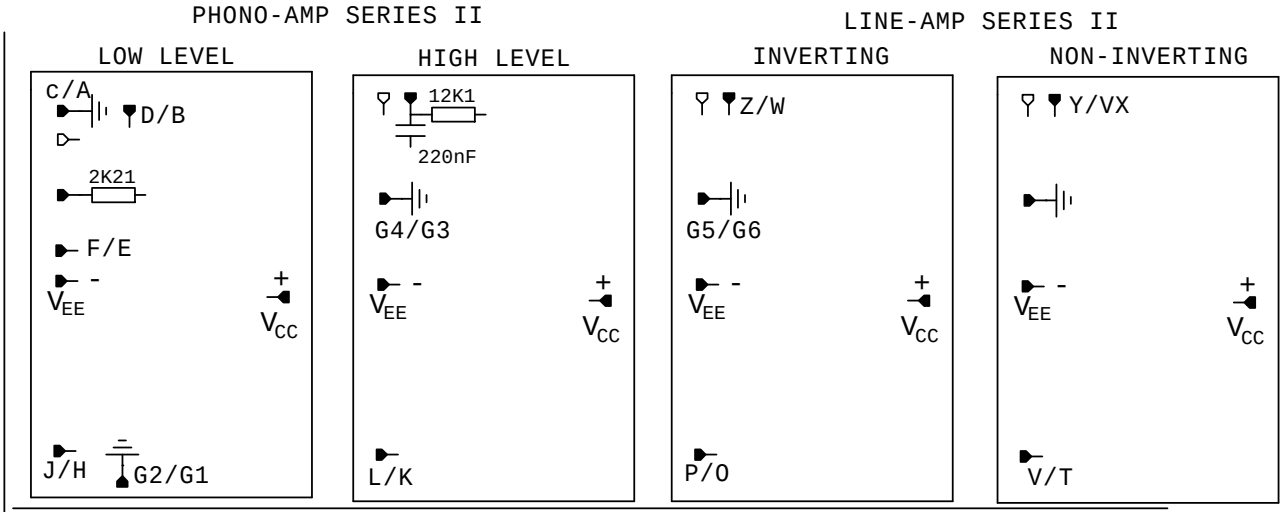

NC

Sockets for Modules on Main PCB, Component Site