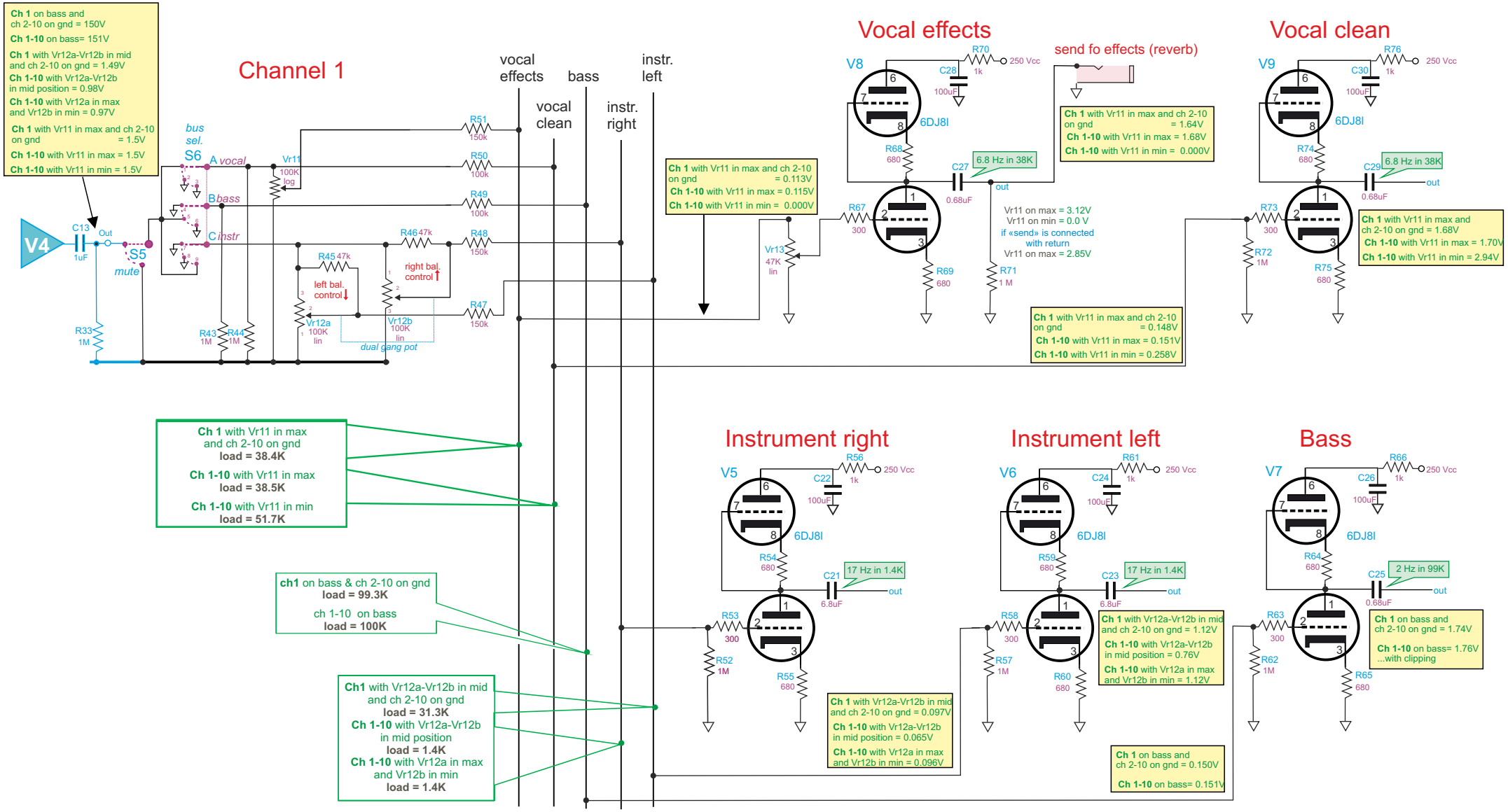Bus amplifiers