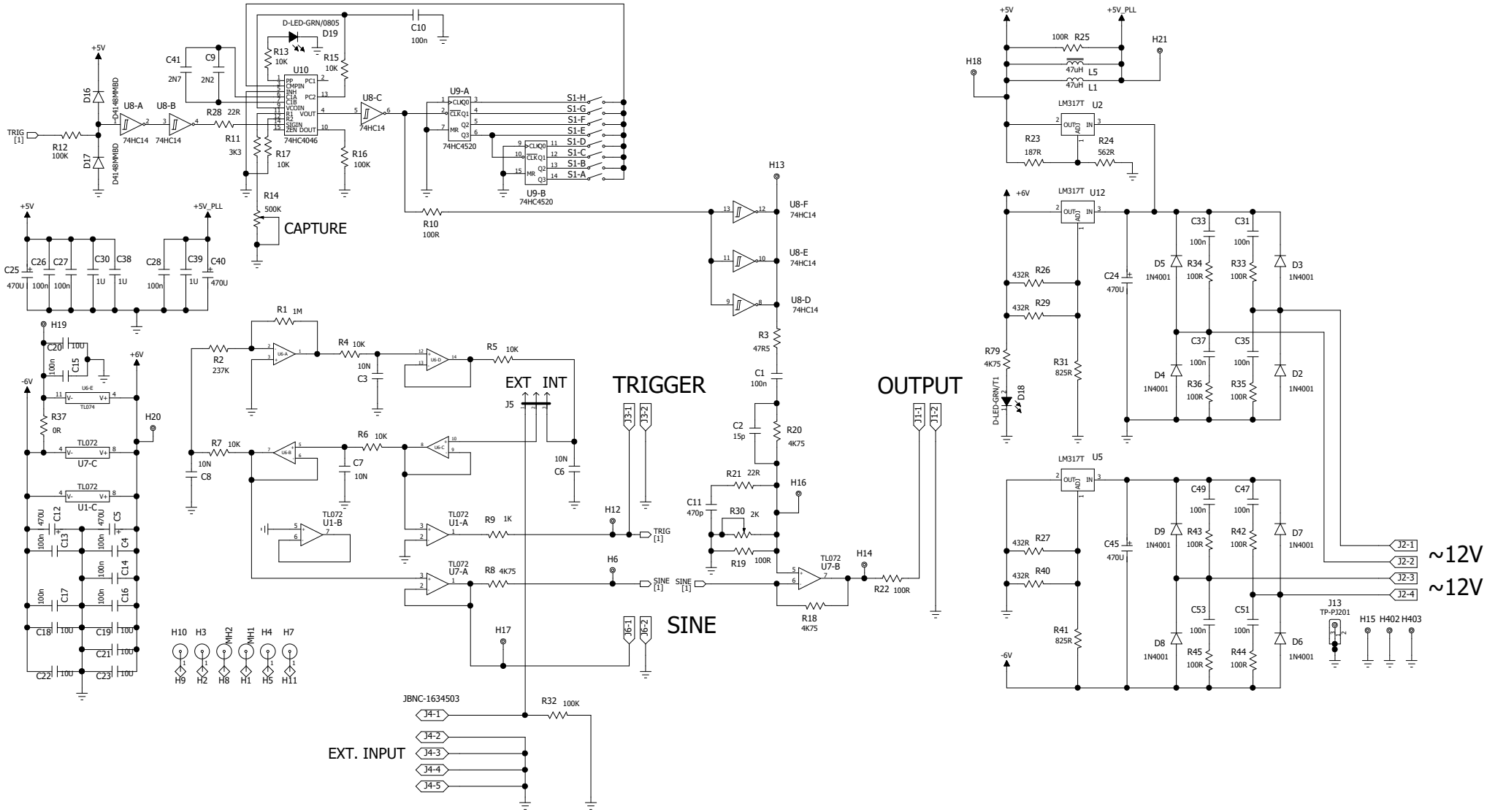
CAPTURE
TRIGGER
OUTPUT
SINE
EXT. INPUT
EXT INT
~12V
~12V
TRIG [1]
SINE [1]
74HC14
74HC4046
74HC4520
TL072
LM317T
JBNC-1634503
TP-PJ201
1N4001
D-LED-GRN/0805