The Bride of Zen: A Single Gain Stage Preamplifer

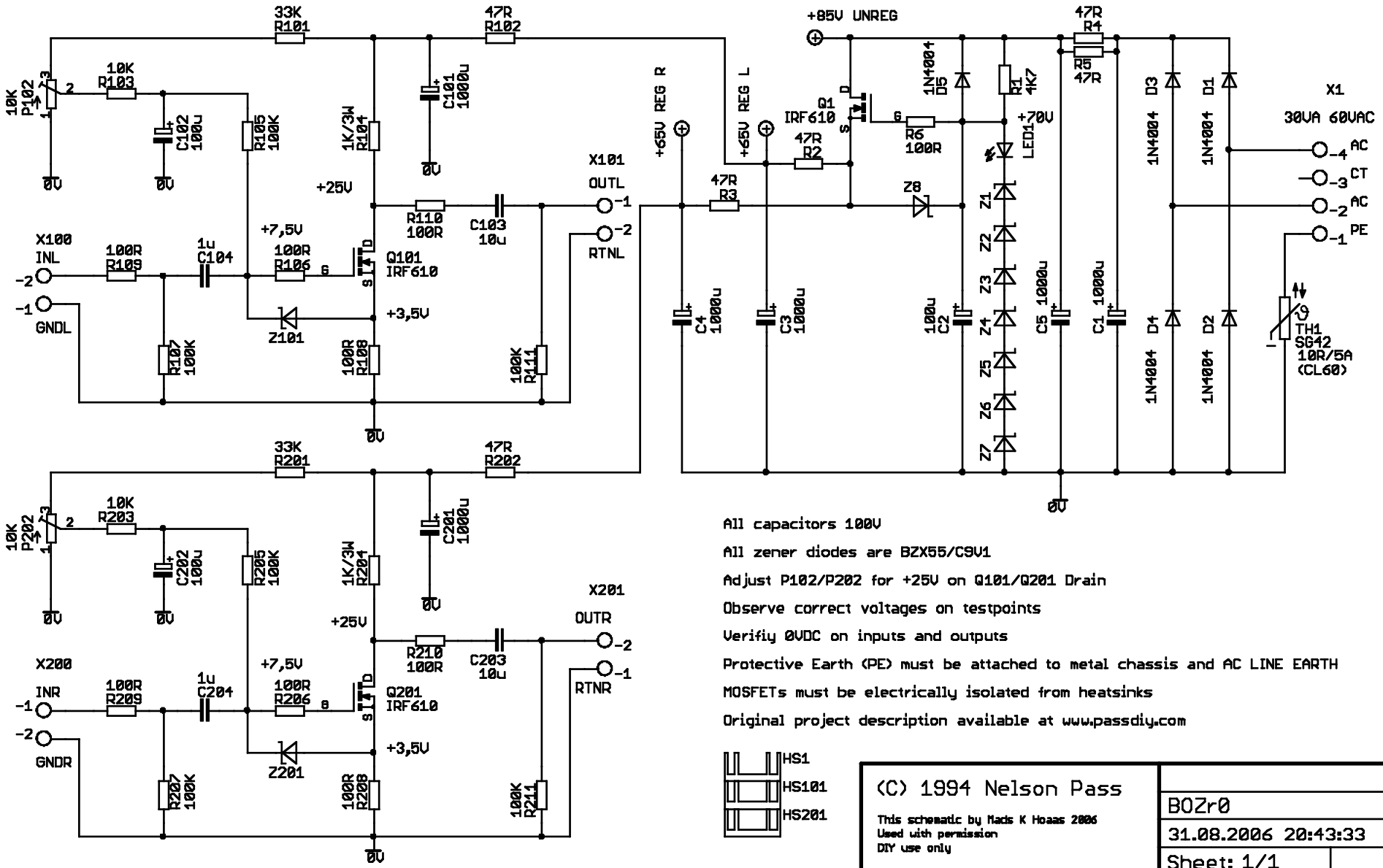

All capacitors 100V

All zener diodes are BZX55/C9V1

Adjust P102/P202 for +25V on Q101/Q201 Drain

Observe correct voltages on testpoints

Verifiy 0VDC on inputs and outputs

Protective Earth (PE) must be attached to metal chassis and AC LINE EARTH

MOSFETs must be electrically isolated from heatsinks

Original project description available at www.passdiy.com

(C) 1994 Nelson Pass

This schematic by Mads K Hoaas 2006
Used with permission
DIY use only

B0Zr0

31.08.2006 20:43:33

Sheet: 1/1