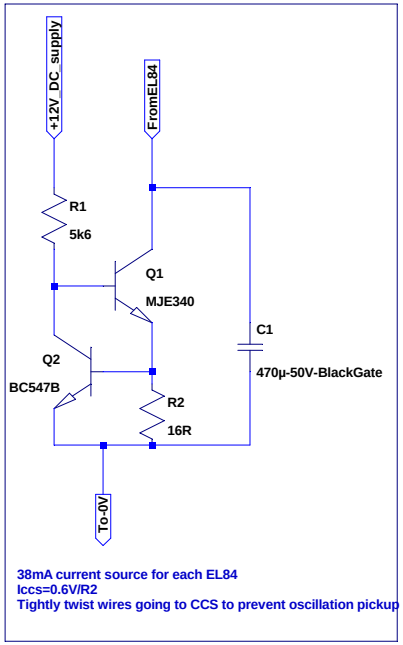


38mA current source for each EL84
Iccs=0.6V/R2
Tightly twist wires going to CCS to prevent oscillation pickup

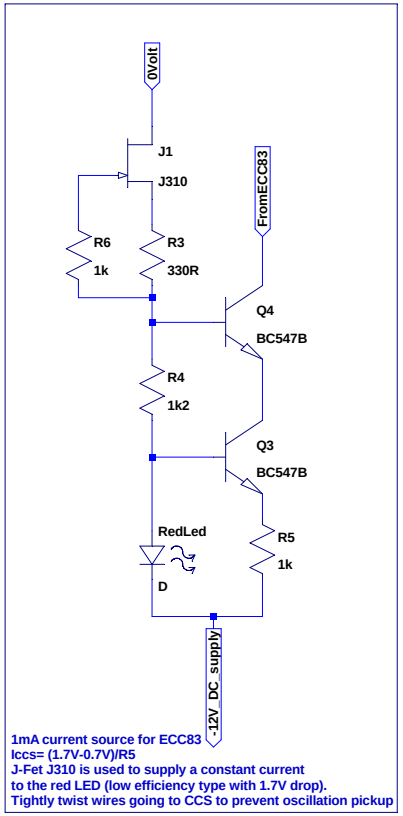


1mA current source for ECC83
Iccs= (1.7V-0.7V)/R5
J-Fet J310 is used to supply a constant current
to the red LED (low efficiency type with 1.7V drop).
Tightly twist wires going to CCS to prevent oscillation pickup

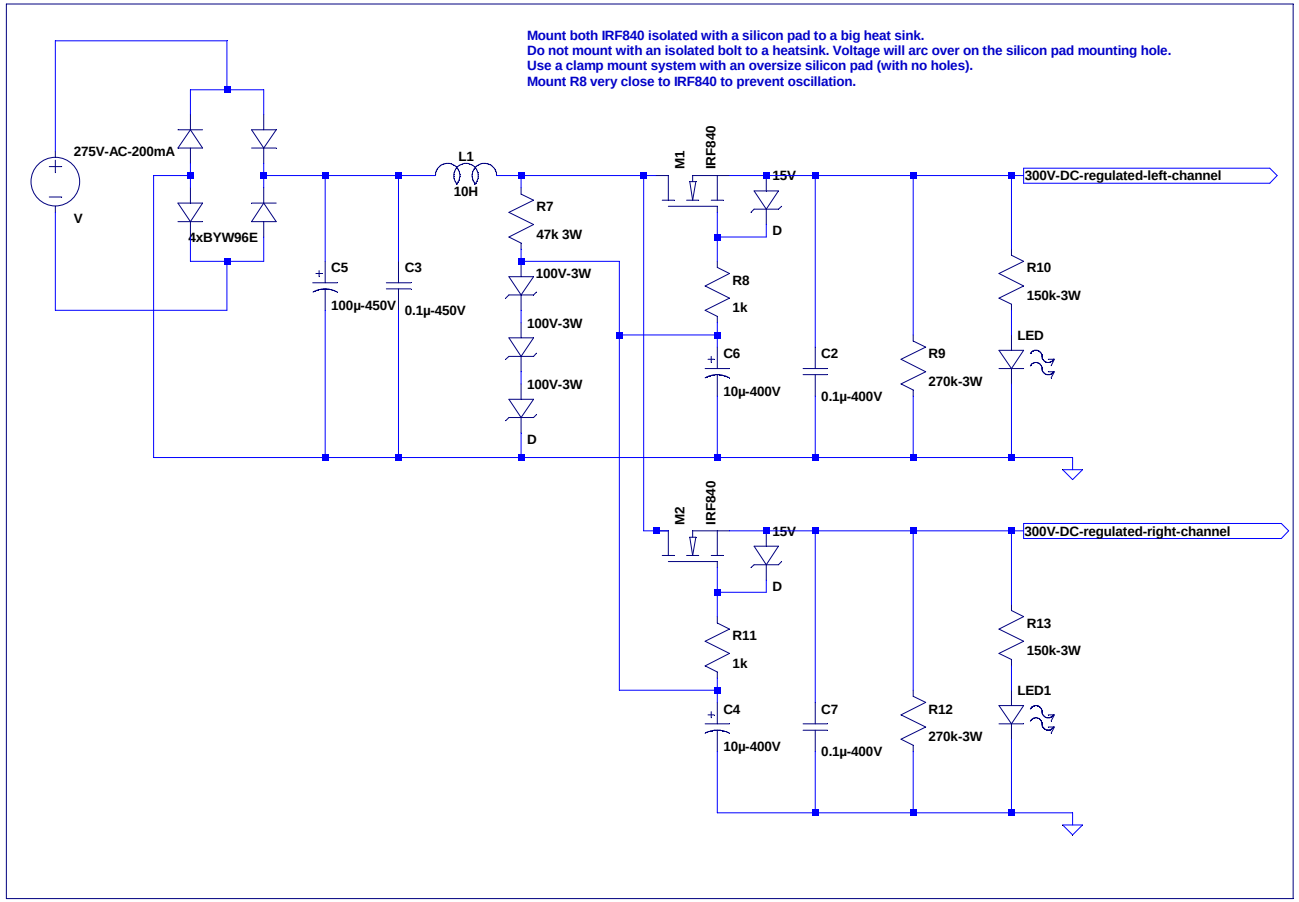


Yves Dupont's modifications to
Gingertube's EL84 Baby Huey amp published on
www.diyaudio.com
Build amp as per Gingertube's schematic,
replace the CCS blocks and B+ supply with the
ones here in the schematic.

15 Jan 2008 - Revision 1

Thanks to Gingertube and YvesM for sharing their work.

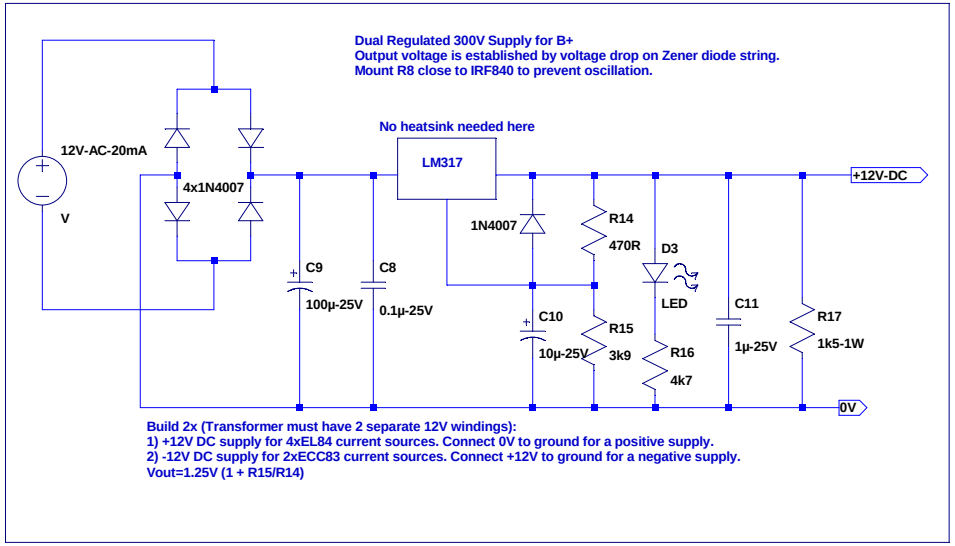


Build 2x (Transformer must have 2 separate 12V windings):
1) +12V DC supply for 4xEL84 current sources. Connect 0V to ground for a positive supply.
2) -12V DC supply for 2xECC83 current sources. Connect +12V to ground for a negative supply.
Vout=1.25V (1 + R15/R14)

--- C:\yves\01-hifi-stuff\power amps\babyhuey-extensions.asc ---