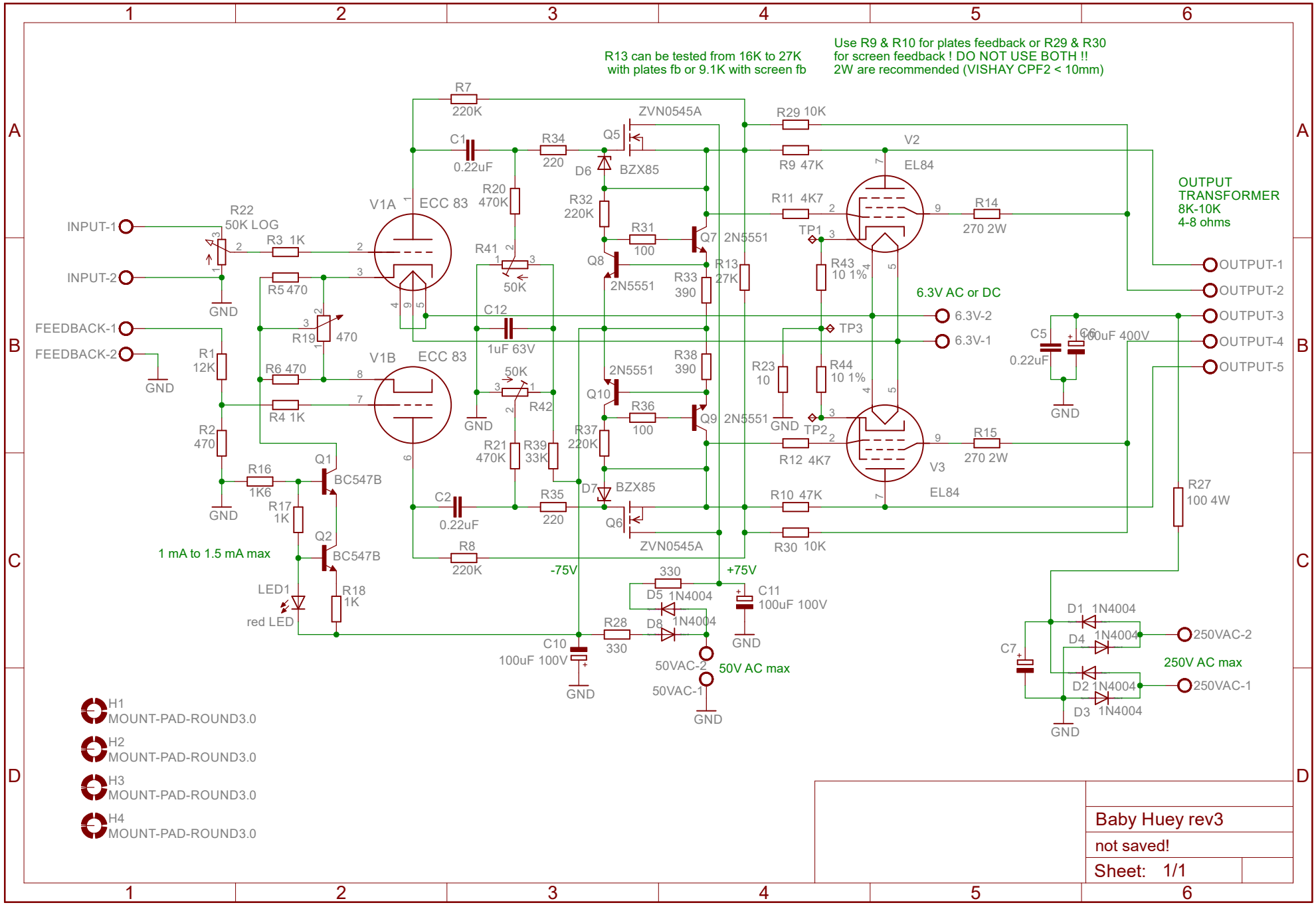
R13 can be tested from 16K to 27K
with plates fb or 9.1K with screen fb
Use R9 & R10 for plates feedback or R29 & R30
for screen feedback ! DO NOT USE BOTH !!
2W are recommended (VISHAY CPF2 < 10mm)
OUTPUT
TRANSFORMER
8K-10K
4-8 ohms
6.3V AC or DC
1 mA to 1.5 mA max
50V AC max
250V AC max
-75V
+75V
INPUT-1
INPUT-2
FEEDBACK-1
FEEDBACK-2
OUTPUT-1
OUTPUT-2
OUTPUT-3
OUTPUT-4
OUTPUT-5
6.3V-2
6.3V-1
250VAC-2
250VAC-1
50VAC-2
50VAC-1
V1A ECC 83
V1B ECC 83
V2 EL84
V3 EL84
R1 12K
R2 470
R3 1K
R4 1K
R5 470
R6 470
R7 220K
R8 220K
R9 47K
R10 47K
R11 4K7
R12 4K7
R13 27K
R14 270 2W
R15 270 2W
R16 1K6
R17 1K
R18 1K
R19 470
R20 470K
R21 470K
R22 50K LOG
R23 10
R27 100 4W
R28 330
R29 10K
R30 10K
R31 100
R32 220K
R33 390
R34 220
R35 220
R36 100
R37 220K
R38 390
R39 33K
R41 50K
R42 50K
R43 10 1%
R44 10 1%
C1 0.22uF
C2 0.22uF
C5 0.22uF
C6 100uF 400V
C7
C10 100uF 100V
C11 100uF 100V
C12 1uF 63V
Q1 BC547B
Q2 BC547B
Q5 ZVN0545A
Q6 ZVN0545A
Q7 2N5551
Q8 2N5551
Q9 2N5551
Q10 2N5551
D1 1N4004
D2 1N4004
D3 1N4004
D4 1N4004
D5 1N4004
D6 BZX85
D7 BZX85
D8 1N4004
LED1 red LED
330
GND
TP1
TP2
TP3
H1 MOUNT-PAD-ROUND3.0
H2 MOUNT-PAD-ROUND3.0
H3 MOUNT-PAD-ROUND3.0
H4 MOUNT-PAD-ROUND3.0
Baby Huey rev3
not saved!
Sheet: 1/1