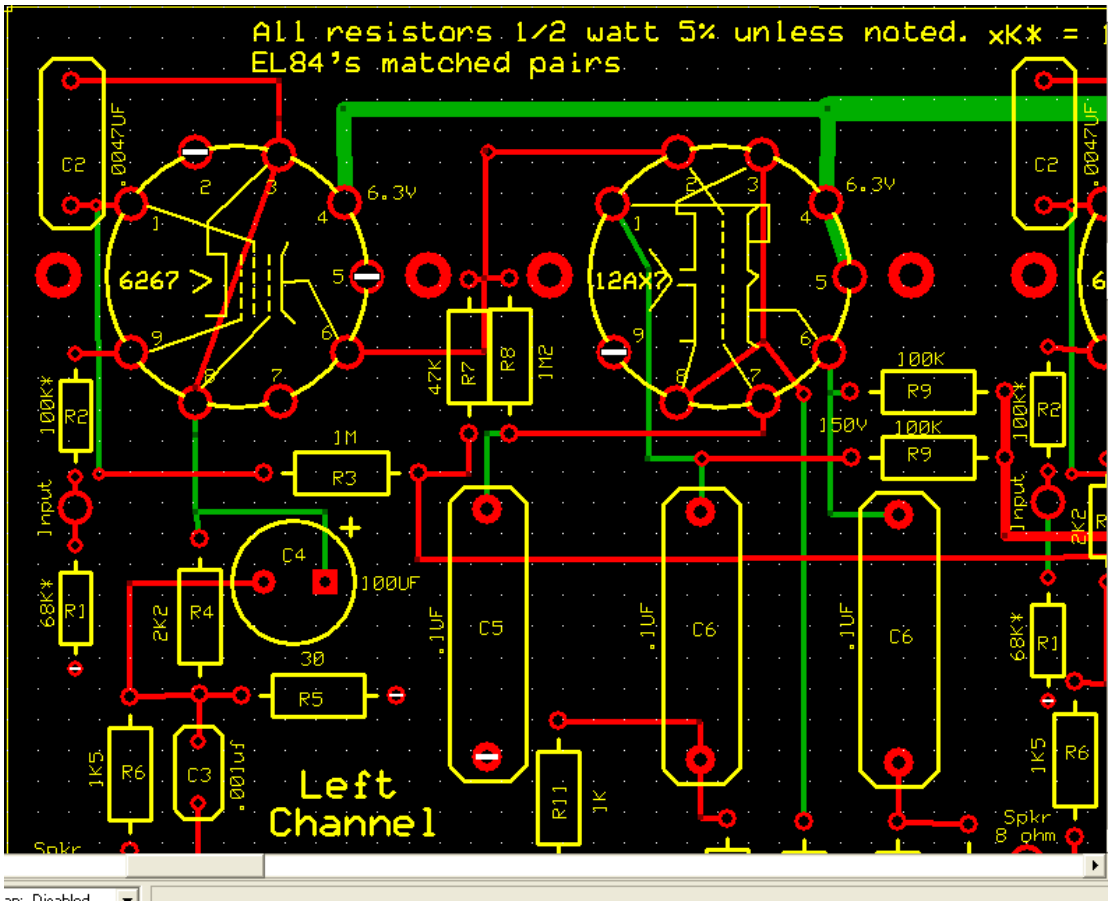
All resistors 1/2 watt 5% unless noted. xK* =
EL84's matched pairs
C2
.0047UF
6267
6.3V
12AX7
47K
R7
R8
1M2
100K
R9
150V
100K*
R2
1M
R3
Input
C4
100UF
68K*
R1
2K2
R4
30
R5
1K5
R6
C3
.001uf
Left
Channel
.1UF
C5
C6
R11
1K
Spkr
8 ohm