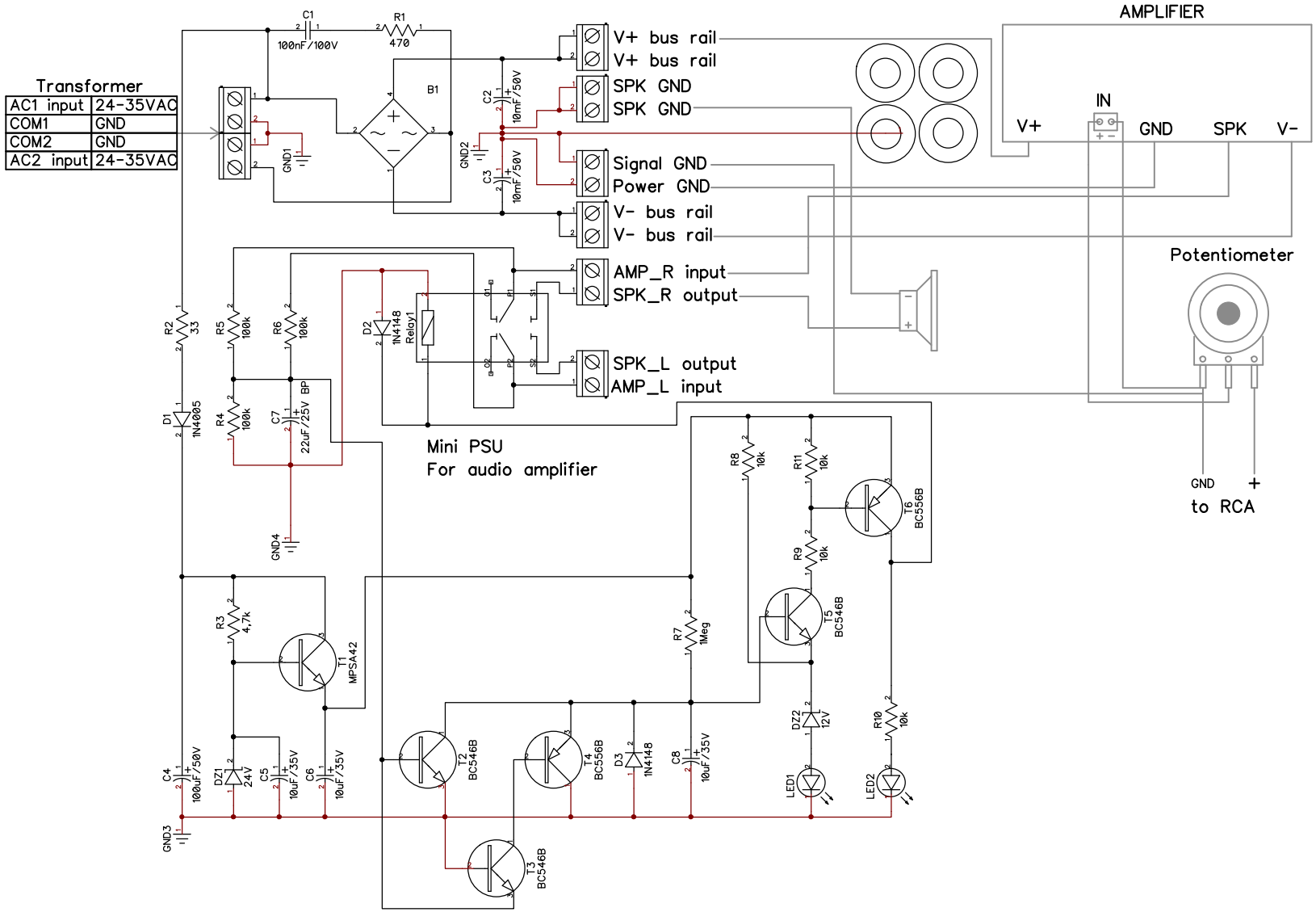
Transformer
AC1 input 24-35VAC
COM1 GND
COM2 GND
AC2 input 24-35VAC
C1 100nF/100V
R1 470
B1
GND1
GND2
C2 10mF/50V
C3 10mF/50V
V+ bus rail
V+ bus rail
SPK GND
SPK GND
Signal GND
Power GND
V- bus rail
V- bus rail
AMP_R input
SPK_R output
SPK_L output
AMP_L input
AMPLIFIER
IN
V+
GND
SPK
V-
Potentiometer
GND
+
to RCA
R2 33
D1 1N4005
R5 100k
R6 100k
R4 100k
C7 22uF/25V BP
D2 1N4148
Relay1
GND4
Mini PSU
For audio amplifier
R3 4,7k
T1 MPSA42
C4 100uF/50V
DZ1 24V
C5 10uF/35V
C6 10uF/35V
GND3
T2 BC546B
T3 BC546B
T4 BC556B
D3 1N4148
C8 10uF/35V
R7 1Meg
R8 10k
R11 10k
T6 BC556B
R9 10k
T5 BC546B
DZ2 12V
R10 10k
LED1
LED2