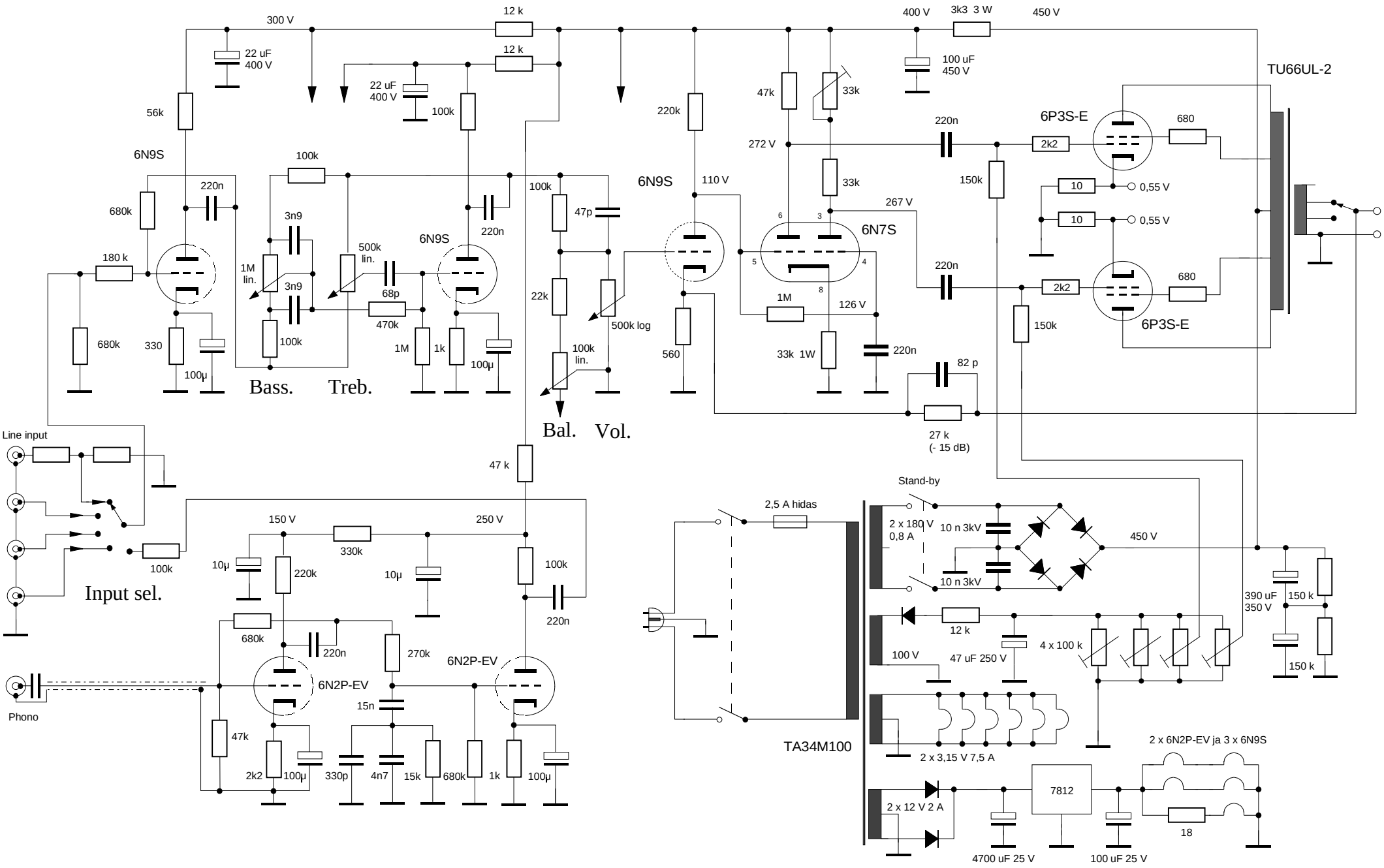A-Sound Classic