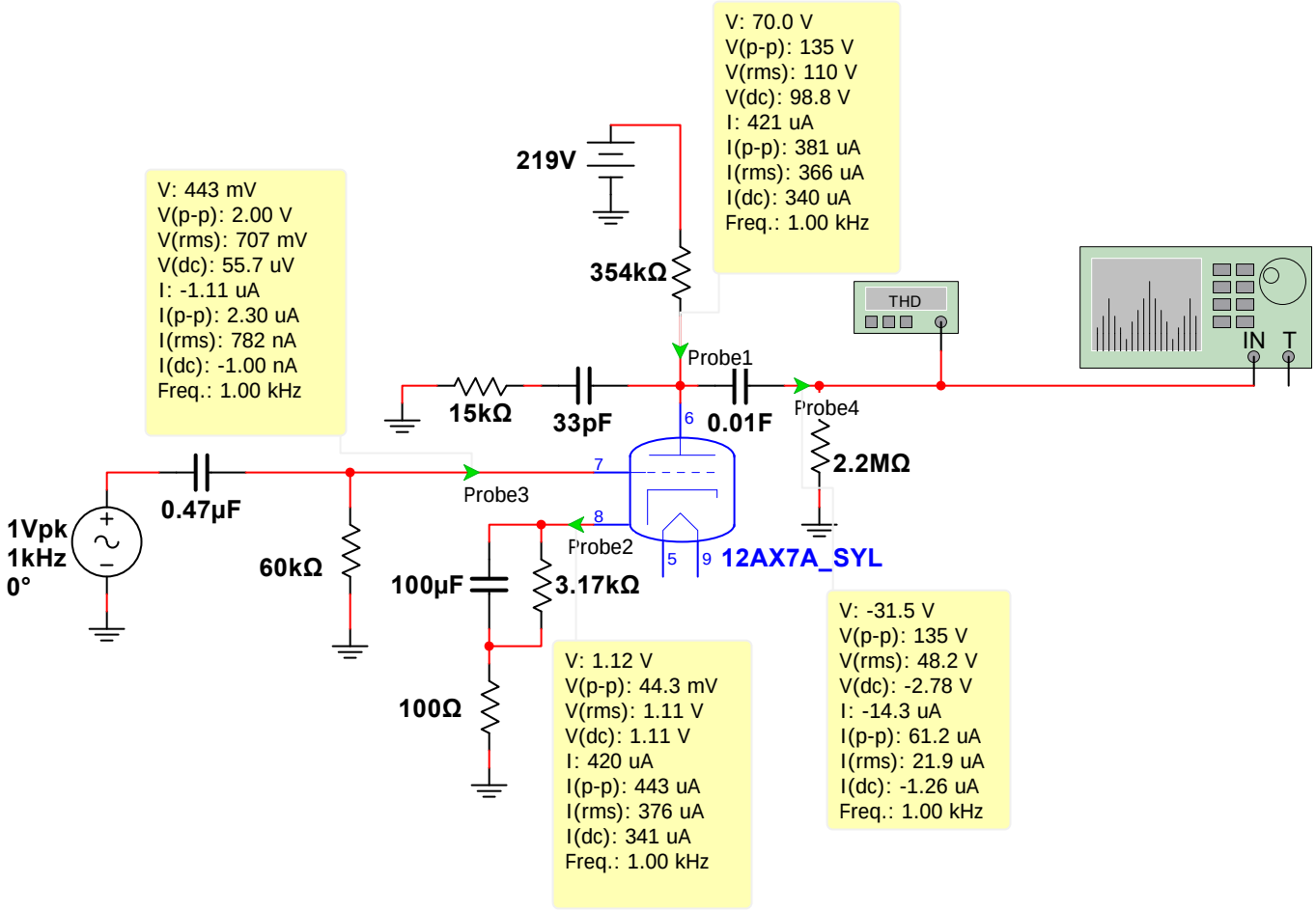
V: 70.0 V
V(p-p): 135 V
V(rms): 110 V
V(dc): 98.8 V
I: 421 uA
I(p-p): 381 uA
I(rms): 366 uA
I(dc): 340 uA
Freq.: 1.00 kHz
219V
354kΩ
V: 443 mV
V(p-p): 2.00 V
V(rms): 707 mV
V(dc): 55.7 uV
I: -1.11 uA
I(p-p): 2.30 uA
I(rms): 782 nA
I(dc): -1.00 nA
Freq.: 1.00 kHz
THD
IN
T
Probe1
15kΩ
33pF
0.01F
Probe4
2.2MΩ
6
7
8
5
9
12AX7A_SYL
0.47µF
Probe3
Probe2
1Vpk
1kHz
0°
60kΩ
100µF
3.17kΩ
100Ω
V: 1.12 V
V(p-p): 44.3 mV
V(rms): 1.11 V
V(dc): 1.11 V
I: 420 uA
I(p-p): 443 uA
I(rms): 376 uA
I(dc): 341 uA
Freq.: 1.00 kHz
V: -31.5 V
V(p-p): 135 V
V(rms): 48.2 V
V(dc): -2.78 V
I: -14.3 uA
I(p-p): 61.2 uA
I(rms): 21.9 uA
I(dc): -1.26 uA
Freq.: 1.00 kHz

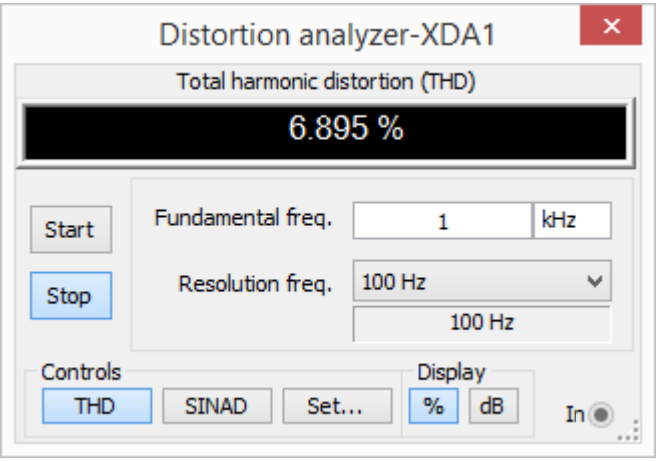
Distortion analyzer-XDA1
Total harmonic distortion (THD)
6.895 %
Start
Stop
Fundamental freq.
1
kHz
Resolution freq.
100 Hz
100 Hz
Controls
THD
SINAD
Set...
Display
%
dB
In

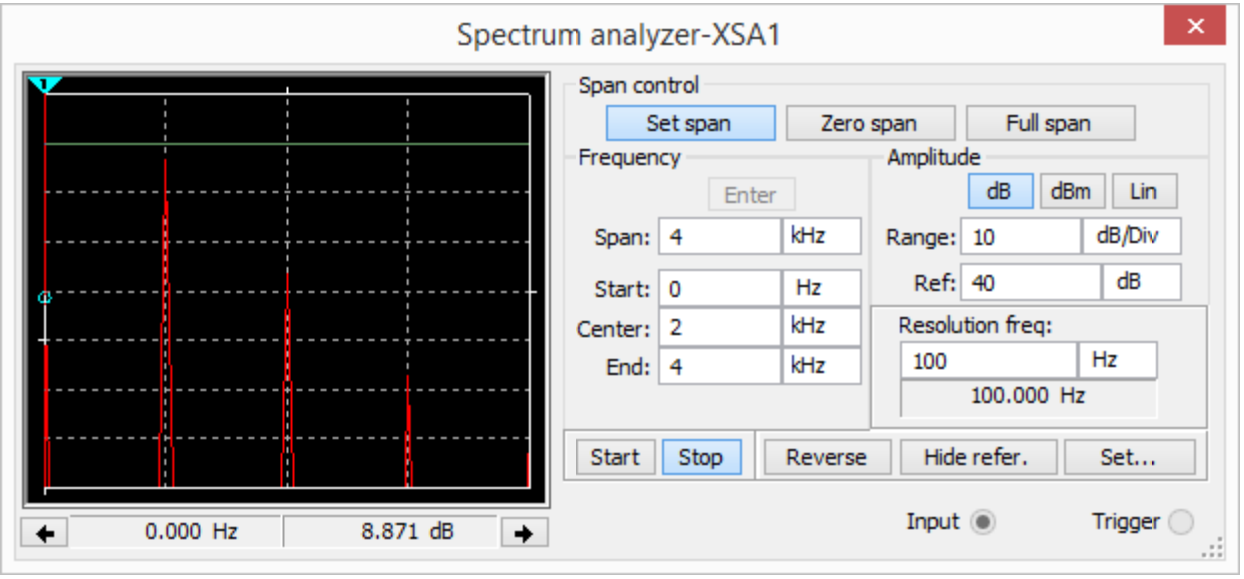
Spectrum analyzer-XSA1
Span control
Set span
Zero span
Full span
Frequency
Enter
Span: 4 kHz
Start: 0 Hz
Center: 2 kHz
End: 4 kHz
Amplitude
dB
dBm
Lin
Range: 10 dB/Div
Ref: 40 dB
Resolution freq:
100 Hz
100.000 Hz
Start
Stop
Reverse
Hide refer.
Set...
0.000 Hz
8.871 dB
Input
Trigger