For 12AV7, at your originally specified VBB+ 262VDC, and 6.36 mA, RA and RK should be 400 ohms, 390 or 430 ohms is good. Stage voltage gain will be 20. If you need higher gain, bypass RK with 1-2 uF / 10V (or greater) cap, for operating it with a 2 KHz LF roll-off. 100 uF or greater for full range response.

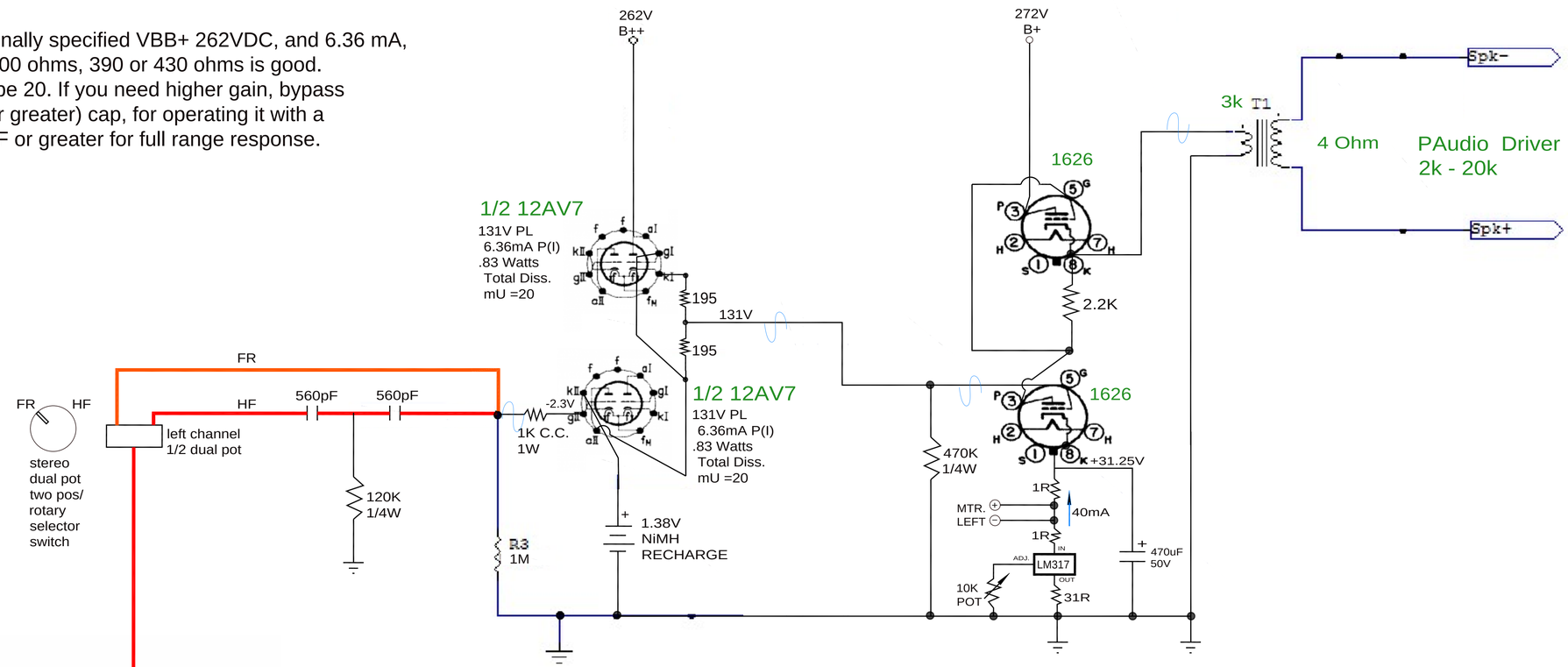

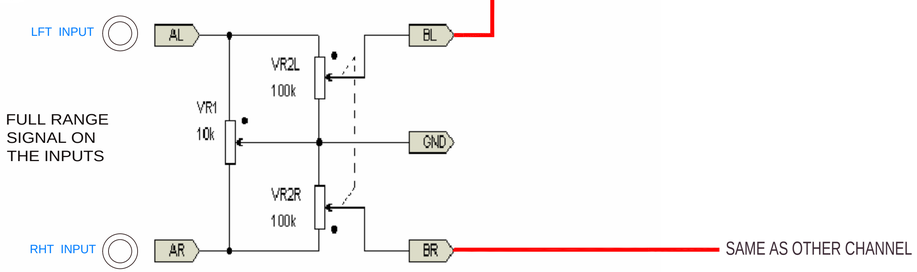

(FRONT PANEL MOUNTED)

*POWER ON/OFF TOG.
*POWER LAMP
*VOLUME CONTROL
*BALANCE CONTROL
*FR/HF ROTARY SWITCH

(TOP CHASSIS MOUNTED)

*0-100mA METER
LEFT 1626 PR

*0-100mA METER
RIGHT 1626 PR

NOTES

1.) SRPP IMPLEMENTATION IN BOTH STAGES.

2.) MOVED THE PLLXO BEFORE THE DRIVER STAGE

3.) ENABLED CAP SWITCH TO RUN FULL RANGE OR HP 2KHZ.

4.) CHANGED TO BATTERY BIASING ON THE INPUT SRPP STAGE.

5.) TUBECAD BROSKIE'S ADJ. FIXED BIAS IN OUTPUT STAGE.

DRAWN ON: DATE : 04/05/13	AMPLIFIER SECTION
A	TITLE: SINGLE ENDED SRPP 1626 POWER AMPLIFIER
B	SIZE: D · CODE: .TCW · DWG NO: SCHEMATIC · REV
C	SCALE: NTS · DRAWN BY: LYDIA PAWLAK · DESIGNED BY: