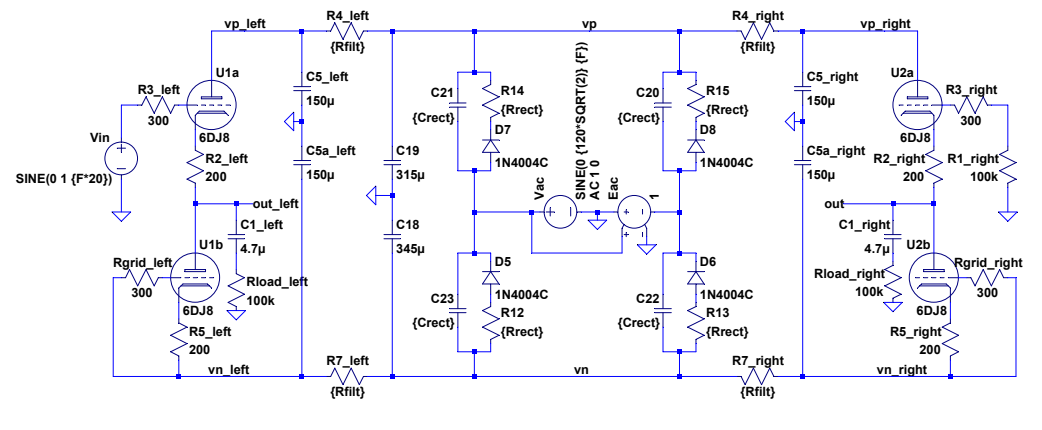
vp_left
R4_left
{Rfilt}
vp
R4_right
{Rfilt}
vp_right
U1a
R3_left
300
6DJ8
Vin
SINE(0 1 {F*20})
R2_left
200
C5_left
150μ
C5a_left
150μ
C19
315μ
C18
345μ
C21
{Crect}
R14
{Rrect}
D7
1N4004C
Vac
SINE(0 (120*SQRT(2)) {F})
AC 1 0
Eac
1
C20
{Crect}
R15
{Rrect}
D8
1N4004C
C5_right
150μ
C5a_right
150μ
U2a
R3_right
300
6DJ8
R2_right
200
R1_right
100k
out_left
C1_left
4.7μ
U1b
Rgrid_left
300
6DJ8
Rload_left
100k
R5_left
200
D5
1N4004C
C23
{Crect}
R12
{Rrect}
D6
1N4004C
C22
{Crect}
R13
{Rrect}
out
C1_right
4.7μ
U2b
Rload_right
100k
Rgrid_right
300
6DJ8
R5_right
200
vn_left
R7_left
{Rfilt}
vn
R7_right
{Rfilt}
vn_right